ADDENDUM No. 2

to Bidding Documents for

TRANSBAY TRANSIT CENTER PROGRAM
BUS STORAGE FACILITY
CONTRACT NO. 17-05-BSF-000

DATE: February 24, 2017

FROM: Transbay Joint Powers Authority
201 Mission Street, Suite 2100
San Francisco, CA 94105

TO: Prospective Bidders

This Addendum forms a part of the Contract Documents and modifies the original Bidding Documents dated October 31, 2016, with amendments and additions noted below. Acknowledge receipt of this Addendum on the Acknowledgment of Receipt of Addenda form (Section 00 04 32). Failure to do so may subject the Bidder to disqualification.

The Pre-Bid Value Engineering Proposals time frame expired on **Friday, February 17, 2017 at 2:00 p.m.**

The Questions on Bid Documents time frame expired on **Friday, February 17, 2017 at 5:00 p.m.**

Bids are due by **Wednesday, March 1, 2017 at 2:00 p.m.**

This Addendum consists of changes to specifications as noted below and incorporates all the Questions on Bid Documents Responses that were received and answered by the Due Date.

CHANGES TO SPECIFICATIONS

1. Section 00 07 00 General Conditions:

    a. Section 9.04.A is revised to read as follows:

    The TJPA shall hold five percent (5%) in retention from each progress payment. The TJPA shall administer retention in conformance with Administrative Code section 6.22J.

    b. Section 6.06.C is revised to read as follows:

    1. For Work performed by Contractor, the markup shall equal a maximum of 15 percent of its direct costs, as defined herein.
    2. For Work performed by a Subcontractor, the markup shall equal a maximum of 15 percent of its direct costs, as defined herein. Contractor shall receive a maximum 5 percent markup on the Subcontractor's total cost.
    3. For Work performed by a Lower-Tier Subcontractor or Supplier, the markup shall equal a maximum of 15 percent of its direct costs, as defined herein. Contractor and Subcontractor shall each receive a 5 percent markup on the total cost of their respective Lower-Tier Subcontractors.
    4. In no case shall the sum of the individual markups applied to a Change Order exceed 25 percent, regardless of the number of Subcontractor tiers involved in performing the Work.

2. Questions on Bid Documents (QBD) Responses:

    a. The attached IFB Questions and Answers are incorporated into the Bid Documents by this Addendum.

END OF ADDENDUM NO. 2

BUS STORAGE FACILITY (Contract 17-05-BSF-000)

Questions are numbered in the order received.

Question No.	Submission Date	Drawing No.	Document/ Spec. No.	Question	Response
1	1.23.17	1/E-5003	26 05 43, 1.02	What type of conduit shall be used for the underground duct bank system? On drawing E-5003, Detail 1 a note says all cable shall be installed in galvanized rigid steel conduit with bushings (This detail is for direct burial conduit in dirt. In specification Section 26 05 43 Underground Ducts and Raceways, paragraph 1.02 Definition A calls for RNC: Rigid Nonmetal Conduit = Type EPC-40-PVC. Please advise what type of conduit you want.	EPC-40-PVC is acceptable per Specification Section 26 05 43 paragraph 2.01. Provide Rigid Steel per Specification Section 26 05 43 paragraph 3.05.I.12, regarding elbows and stub-ups.
2	1.23.17	---	13 34 23.26, 2.01	Can Ameristar be added to the list of acceptable manufacturers?	Ameristar is approved as a vendor for the Guard Booth.
3	1.24.17	---	00 07 00, 10.02	The sum listed for performance and payment bonds is $600,000,000 each. Is this amount correct?	Specification Section 00 07 00, paragraph 10.02.A will be revised to indicate that the Contractor shall purchase and maintain performance and payment bonds valued at *"...a sum not less than 100 percent of the Contract Sum…"*
4	1.26.17	---	00 02 00/AT2	The Bidder's Checklist, Spec Section 00 02 00/AT2 mentions that a Certificate of Bidder Regarding Nondiscrimination in Contracts and Benefits should be available in Spec Section 00 04 70. I am unable to locate this section of form.	Specification Section 00 04 70 is attached and will be included in an upcoming addendum.
5	1.27.17	---	32 32 23	The plans call out a Caltrans approved segmental retaining wall. Is there a particular style and color from Keystone or Versa-Loc, for example that you would like to see on this project?	Contractor is to utilize Calstone CMU color S3147WC for the base color and S359 for the accent color, or an equivalent block and colors. See the attached Excel file for the access color pattern.
6	1.30.17	---	01 15 90	Where will the field trailers be located?	Field trailers are to be located within the project site boundary lines at a location determined by the Contractor.
7	1.30.17	---	00 04 70	This section (00 04 70) is listed in the Table of Contents and on the Bidder's Checklist but is missing from the specifications. Please advise.	See response to question 4 above.
8	1.30.17	---	00 04 50	Please confirm this section (00 04 50) is not due at the time of bid submission from pre-qualified bidders.	Confirmed.

Question No.	Submission Date	Drawing No.	Document/ Spec. No.	Question	Response
9	1.30.17	---	00 04 10	Bid Form page 00 04 10-3 lists damage rate per day at $2,500. Bid Form page 00 04 10-5 lists $3,000 per day. Please advise what the liquidated damages are for the project.	The $2,500 indicated in Part B of the Bid Form is for bid evaluation of the A+B proposal only and is not intended to match the liquidated damages of $3,000/day.
10	1.31.17	---	00 0821/ AT3-B	Per instructions listed on this form, bidders are to submit a copy of the proof of the SBE/DBE firm listed as well as a signed 'letter of intent'. Please consider changing this requirement so that these forms can be submitted with the post-bid documents (escrow or sub certifications).	Confirmed. SBE/DBE documents may be provided post-bid.
11	1.31.17	S-2052 & S-3032	---	Sheet S-2052 calls out RW #2 as a segmental retaining wall. Detail F on Sheet S-3032 calls out RW #2 as a Caltrans Type 1A. Which is it?	Retaining Wall #2 is to be a Caltrans RW Type 1A, per the details on Sheet S-3032. A revised Sheet S-2052 with a corrected callout is attached and will be issued in an upcoming addendum.
12	2.1.17	C-2001	---	Can you tell us what color the colored concrete sidewalk is?	Sidewalk color is to comply with San Francisco Public Works standards.
13	2.1.17	C-2002, A-1032	---	There are three maintenance gates shown on the plans at Perry Street. The architectural plans indicate them with note 25, “Not Used”. Are we installing gates as shown and if so, what is the style of each of the gates?	See the attached revised Sheet A-1032 for updated gate information.
14	2.1.17	---	---	Regarding the TL4 Crash System, who can I contact for clarification of this scope to submit an accurate bid?	Per Specification Section 00 02 00 paragraph 1.4, Interpretations and Addenda, all questions on the bid documents must be submitted in writing using the QBD form included in Section 00 02 00-AT1.
15	2.1.17	__	C-1001, C-1002	In regards to Sheets C-1001 and C-1002 titled Existing Condition and Demo plan, it is noted by the legend and shown on the plan views of the subject drawings that the contractor is to remove buried foundations as needed. Should the contractor assume all of the referenced buried foundations are below the elevation of flatwork demo and below the elevation required to install the permanent 12” unreinforced concrete paving and required 8” of base as shown on sheets C-2001 and C-2002, as well as any foundations for permanent structures or walls. Or will the elevations be provided to what depth these foundations have been demolished to?	Please refer to the attached demolition drawings from the West Approach Seismic Safety Project. The existing Bents 21–31 foundations were demolished down to 3 ft. below grade, as indicated on sheets 272–314 of 419.

Question No.	Submission Date	Drawing No.	Document/ Spec. No.	Question	Response
				Please note the reference drawings provided have illegible elevations and no information is provided to what elevation the buried foundations have been demolished to.	
16	2.2.17	---	S-1071	The following are questions related to the above referenced job for the TL4 Crash Barrier Scope: 1. On sheet S-1071 the post spacing as shown for the TL4 system is 5' typical. This system is approved up to a maximum of 8' post spacing. Is it acceptable to supply a TL4 system with 8' post spacing typical and adjusted recess window in concrete barrier to 5'-6" spacing, i.e., maintain one recess window on each side of post as shown? 2. Sheet S-1002 does not show a transition section for the horizontal rails. This transition section is used for the horizontal rail to slope from horizontal down to the top of the concrete barrier at the leading edge of the noise wall. Thus if an errant vehicle impacts the TL4 wall at the leading edge of the wall the sloped rail will prevent any snagging or impact on the first full height post. Please confirm if Transbay wants to include a transition section to the leading edge (direction of traffic) of the TL4 wall and if it should be as an additional area. 3. On sheet S-1071 the leading edge of the concrete crash barrier is more than 2" from the leading edge of the horizontal rail (C S-1071). Item 10, Section 1.03 Submittals of Specification 134819 Acrylite Soundstop TL4 wall states the steel may be independently sourced from the manufacturer. Thus please confirm if the rail configuration has to comply with the FHWA approved modification 005 and not as shown in drawing S-1071 so all potential steel suppliers will know of this FHWA requirement.	1. Revising the 2'-6" center to center spacing of the recesses in the outside face of the concrete barriers is not permitted. A uniform post spacing of 7'-6" is acceptable if all other contract requirements are met. The length of the TL4 system, exclusive of any transition sections, is 170 ft as shown on Sheet S-1002. This will require the use of a combination of 7'-6" and 5'-0" post spacing. Twenty spaces at 7'-6" with two spaces at 5'-0" at each end of the TL4 system is acceptable. 2. Refer to Specification Section 13 48 19. A transition section shall be included if it is required to meet the contract requirements, as required for Test Level 4, and as determined by the Engineer responsible for the TL4 system. The length of the TL4 system, exclusive of any transition sections, is 170 ft, as shown on Sheet S-1002. 3. Refer to Specification Section 13 48 19, in particular, paragraph 1.03.A, Working Drawings, for the requirements. The rail configuration must meet the contract requirements, as required for Test Level 4, and as determined by the Engineer responsible for the TL4 system. Complete details of the TL4 system are a part of the working drawings. They are not provided in the project plans.

Question No.	Submission Date	Drawing No.	Document/ Spec. No.	Question	Response
17	2.3.17	---	04 22 00	What style, color, etc. of masonry block is being used for the soundwall? If we are to match an existing sample including grout colors, please provide photographs that we can send to potential masonry subs so that they can bid on an appropriate product.	See response to question 5 above.
18	2.3.17	U-2002	---	Where is the irrigation backflow preventer located on sheet U-2002?	An upcoming addendum will include a new irrigation backflow preventer, added to Sheet I-2002, between the existing column and the Storage Building.
19	2.3.17	S-2024	---	On sheet S-2024, it seems to indicate that the CMU around the storage building does not have soundproof cladding. The reference Detail C/S-3000 shows that the CMU wall does get soundproof cladding. Is this section wall soundproofed?	The soundwall is to be constructed per the details shown on Sheet S-3000.
20	2.3.17	C-2301	---	Can you identify all of the bridge columns that get protection as shown in Detail 6 on sheet C-2301?	Contractor is to utilize column protection as shown in Detail 6 on Sheet C-2301 for the following columns: three large columns at the entrance to the facility located along Bent Line 8 and all median island columns located along Bent Line 9.

SECTION 00 04 70 – CERTIFICATE OF BIDDER REGARDING NONDISCRIMINATION IN CONTRACTS AND BENEFITS

Bidder, by signing and submitting the attached Bid Form, hereby acknowledges that Bidder has read and will comply with chapter 12 B "Nondiscrimination in Contracts" of the San Francisco Administrative Code and attests to the following (please check the applicable box):

- ❑ The San Francisco Human Rights Commission (HRC) has certified that Bidder is in compliance with chapter 12B of the San Francisco Administrative Code, and all applicable related requirements as specified in the Contract Documents, and the certification is in effect on the date of Bid opening. A copy of the Bidder's certification is attached.

- ❑ Bidder has submitted Form HRC-12B-101, Form HRC-12B-102, or Form HRC-12B-103 and all required documentation to the HRC seeking certification of compliance with chapter 12B, and determination of compliance is pending review by the HRC. Bidder agrees to resolve all noncompliance through conciliation with HRC as a condition precedent to award of the Contract. If the HRC determines that Bidder is noncompliant, Bidder's Bid shall be deemed nonresponsive. A copy of the Bidder's application form is attached.

- ❑ Bidder acknowledges that full compliance with chapter 12B of the San Francisco Administrative Code is a condition precedent for award of the Contract, and if determined to be the low Bidder, Bidder will submit Form HRC-12B-101, Form HRC-12B-102, or Form HRC-12B-103 and all required documentation to the HRC within 10 working days after the date of Bid opening. If the HRC determines that Bidder is non-compliant, Bidder's Bid shall be deemed non-responsive.

Bidder's Name	Signature of Bidder/Authorized Representative
Name and Title of Signer	Date
Bidder's Street Address	
Bidder's City, State, ZIP	
Bidder's Telephone No.	

Note: The text of chapter 12B of the San Francisco Administrative Code is available online at http://sfgov.org/cmd/sites/default/files/Documents/chap12b.pdf.

HRC forms and Quick Reference Guide are available on the TJPA website: http://transbaycenter.org/uploads/2009/10/HRC-12B-Fact-Sheet.pdf. For questions regarding 12B compliance, contact the HRC, 25 Van Ness Avenue, Suite 800, San Francisco 94102-6033, telephone (415) 252-2500, http://sf-hrc.org/. Bidders seeking certification are advised to submit HRC forms and accompanying documentation to the HRC at the earliest possible opportunity.

END OF SECTION 00 04 70

SPECIFICATION LOG

Revision	Date
A	October 31, 2016

QBD #5

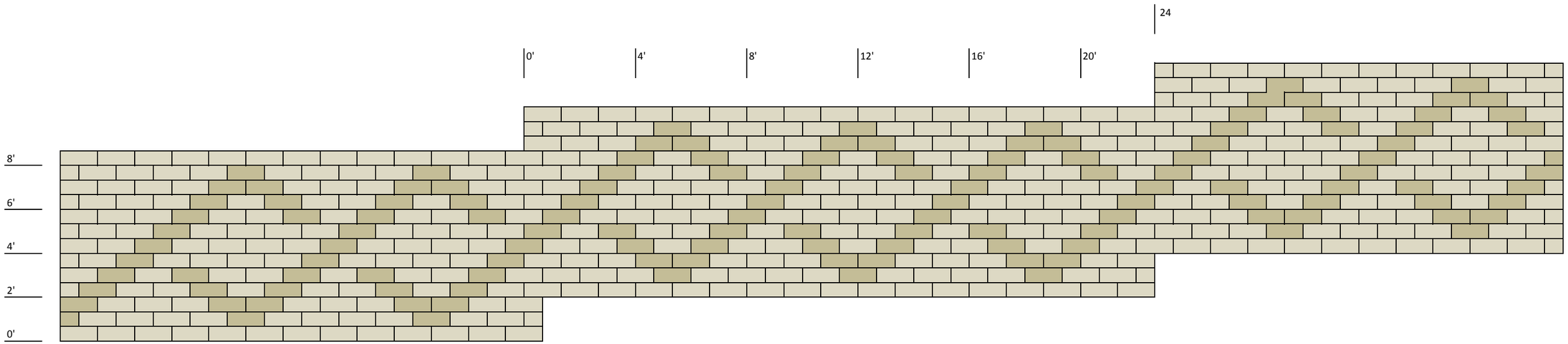

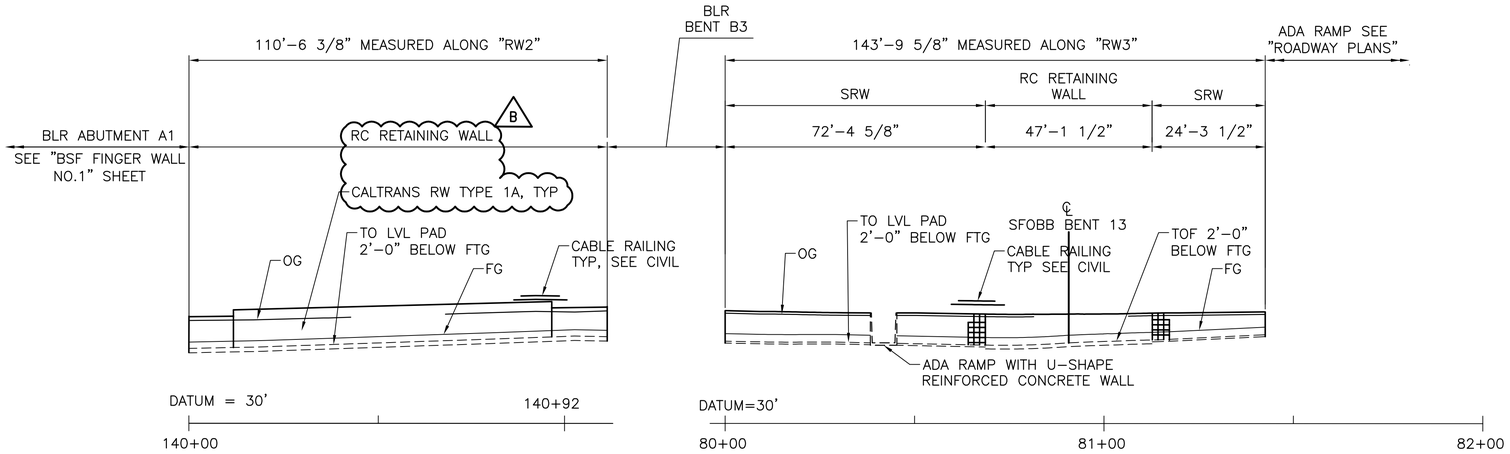

A S-2052 **WALL ELEVATION**
SCALE: 1"=20'-0"

NOTE:

1. SRW TOP OF LVL PAD SHALL BE 2'-0" MIN BELOW FG, TYP. SEE S-3032

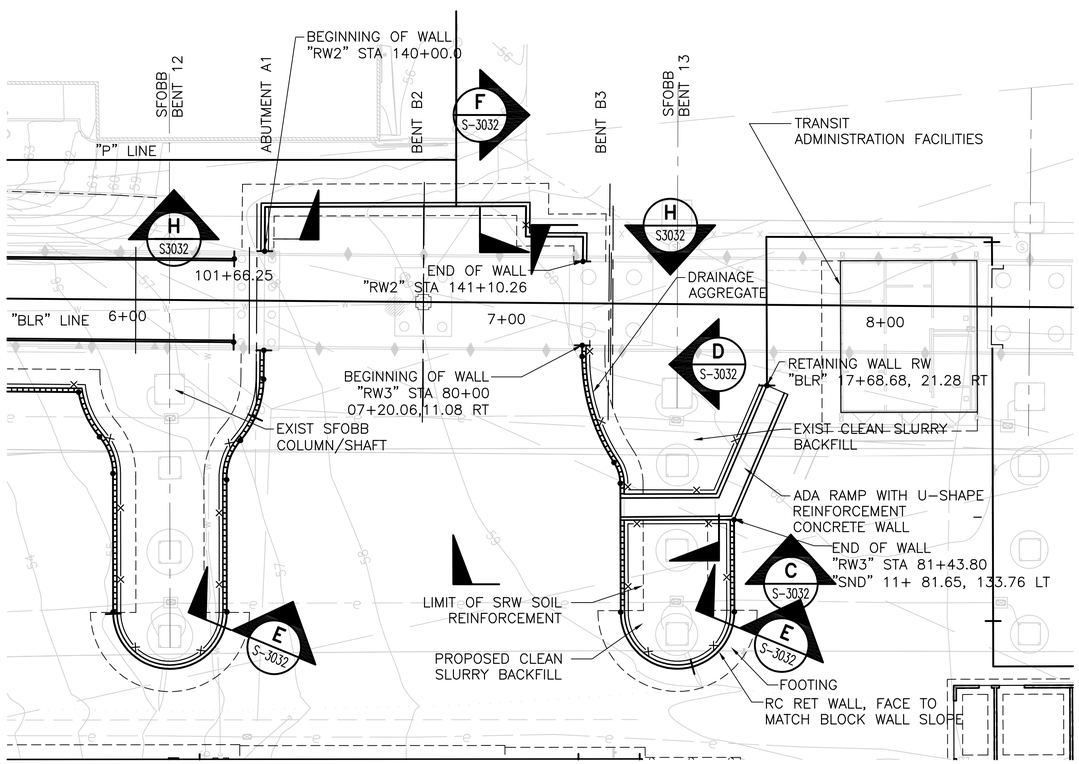

1 S-2002, S-2052 **FOUNDATION PLAN**
SCALE: 1"=20'-0"

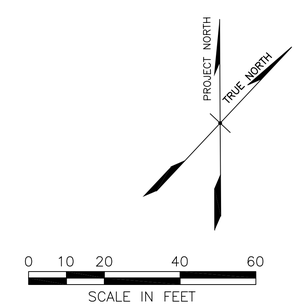

DIST	COUNTY	ROUTE	POST MILE
04	SF	80	5.62
RW3 WALL NO.		34E0025	

DESIGN OVERSIGHT

SIGN OFF DATE

ARCHITECT/ENGINEER SEAL

Transbay Transit Center
TRANSBAY JOINT POWERS AUTHORITY

CONSULTANT:
OLMM CONSULTING ENGINEERS
San Francisco Phone: 415.882.9449
Oakland Phone: 510.433.0828

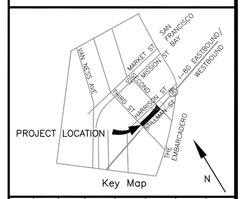

REVISIONS

NO.	DATE	DESCRIPTION	BY
A	10-31-16	ISSUED FOR BID	SG
B	02-07-17	REVISED PER QBD	SG

CONTRACT NO. 17-05-BSF-000

PROJECT TITLE: TRANSBAY TRANSIT CENTER PROGRAM BUS STORAGE FACILITY SAN FRANCISCO, CA

SHEET TITLE: FINGER WALL NO. 2 "RW2" & RW3" PLAN & ELEVATION

APPROVED: T. POST
PRINCIPAL ENGINEER / ARCHITECT

APPROVED: M. WOOD
PROJECT MANAGER

APPROVED: I. DIMITROV
PROJECT ENGINEER / ARCHITECT

DESIGNED BY: G. CARRASCO
CHECKED BY: I. DIMITROV
DRAWN BY: P. DE MESA
DATE: 02/07/17
SCALE: 1"=20'-0"
FACILITY NO. 160
REVISION B
SHEET NUMBER S-2052
SEQUENCE NUMBER 168 of 256

XREFS: XBSCSITE.dwg\, TJPA-TB_22x34D.dwg\, XBSASITE.dwg\, XBSCSTRPE.dwg\, XSURVEYBS.dwg\, XBSSFNWALL.dwg\, XBSSFNDBR.dwg\, XBSOLMMLO2.dwg\, XBSSWALLC1.dwg\, XBSCALIGN.dwg
LAYS: 1 #8 Yes, 2/17 - DWG#s: 1 Layers: Yes, Vis: ALL, Xref: ALL, Xref Layers: Yes, Vis: ALL, Xref Layers: Yes, Vis: ALL

Copyright 2006 by the City and County of San Francisco. These documents are the sole property of the City and County of San Francisco and are protected by the Copyright Act. Any reproduction, publication, or use by any method, in whole or in part, without the express written consent of the Transbay Joint Powers Authority Commission is prohibited.

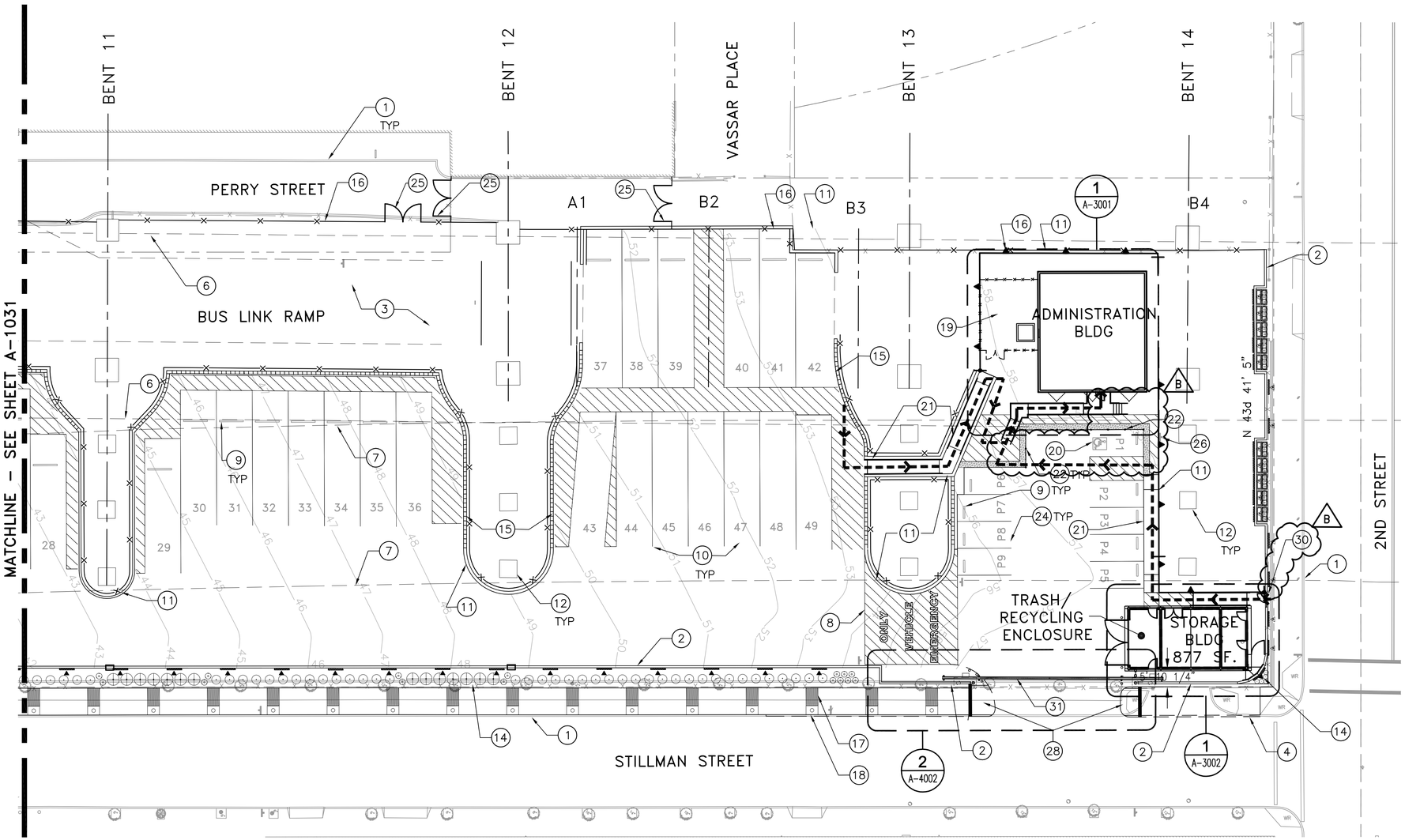

KEY NOTES:

1. EXISTING SIDE WALK AND GUTTER.
2. CMU BLOCK WALL WITH SOUND ATTENUATION PANELS. SEE A–8001 AND STRUCTURAL DRAWINGS FOR LOCATIONS.
3. BUS LINK RAMP, SEE CIVIL AND STRUCTURAL DRAWINGS.
4. CONCRETE CURB, SEE CIVIL DRAWINGS.
5. CONCRETE CURB & GUTTER. SEE CIVIL DRAWINGS.
6. EXISTING EDGE OF UPPER BAY BRIDGE APPROACH.
7. EXISTING EDGE OF LOWER BAY BRIDGE APPROACH.
8. STRIPING ON AC PAVING. SEE CIVIL DRAWINGS.
9. WHEELSTOP, SEE CIVIL DRAWINGS.
10. BUS PARKING & STRIPING
11. CONCRETE RETAINING WALL, SEE STRUCTURAL DRAWINGS.
12. EXISTING BRIDGE SUPPORT CONCRETE COLUMNS.
13. NOT USED
14. LANDSCAPE AREA, SEE CIVIL AND LANDSCAPE DRAWINGS.
15. STACKED BLOCK RETAINING WALL. SEE STRUCTURAL DRAWINGS.
16. DECORATIVE METAL FENCE, SEE A–8004.
17. INTEGRAL COLORED CONCRETE SIDEWALK. REFER TO SPECIFICATIONS FOR COLOR.
18. TREE WELL GRATE. REFER TO LANDSCAPE DRAWINGS.
19. OUTDOOR STORAGE AREA WITH CHAIN LINK FENCE.
20. ACCESSIBLE VAN PARKING STALL, SEE CIVIL DRAWINGS & 6/A–1033.
21. CONCRETE SIDEWALK, SEE CIVIL DRAWINGS. AND SHEET A–1033 & A–6001 FOR DETAILS.
22. BOLLARD, SEE B/A–8005.
23. NOT USED.
24. EMPLOYEE PARKING
25. MAINTENANCE GATES LOCATED ALONG THE SOUTH SIDE OF PERRY STREET, PROVIDE LOCKSETS SIMILAR TO THE PEDESTRIAN DOORS LOCATED ALONG 2ND AND 3RD STREET. PROVIDE A FLUSH BOLT AS PART OF THE HARDWARE SET PACKAGE. GATES LOCATED PERPENDICULAR TO PERRY STREET WILL BE FIT–UP WITH A 2–WAY LOCKABLE LIVESTOCK GATE LATCH AND LOCKABLE SURFACE BOLT. PADDLE LOCKS PROVIDE BY OTHERS. (B)
26. POST MOUNTED ADA SIGNAGE. POST SHALL BE SET IN A SLEEVE PLACED ON TOP OF THE CONCRETE RETAINING WALL.

KEY NOTES – CONTINUED:

27. NEW OR EXISTING ROADWAY STRUCTURES. SEE CIVIL DRAWINGS.
28. NEW ACCESSIBLE CURB RAMPS. SEE CIVIL DRAWINGS. (B)
29. NEW CONCRETE RAMP (HC ACCESSIBLE). SEE CIVIL DRAWINGS.
30. DECORATIVE MTL SWING GATE (IN CLOSED POSITION) (B)
31. DECORATIVE METAL SLIDING GATE (IN THE CLOSED POSITION).

1 / A–1030 **ENLARGED SITE PLAN – EAST**
SCALE: 1"=20'–0"

LEGEND

- ACCESSIBLE PATH OF TRAVEL
- PAINTED STRIPING. SEE CIVIL DRAWINGS
- COLORED CONCRETE
- CHAIN–LINK FENCE
- GUARDRAIL

PARKING SUMMARY

1 COMPACT PARKING SPACE (8'–0" X 18'–0")
10 REGULAR PARKING SPACE (9'–0" X 18'–0")
1 VAN ACCESSIBLE PARKING SPACE

12 TOTAL EMPLOYEE PARKING SPACES

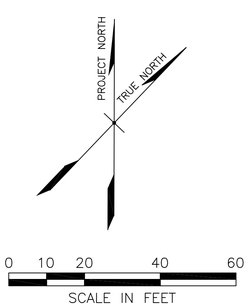

Transbay Transit Center
TRANSBAY JOINT POWERS AUTHORITY

CONSULTANT:
JACOBS
300 FRANK H. OGAWA PLAZA, SUITE 10
OAKLAND, CA 94612
PHONE: 510–457–0027

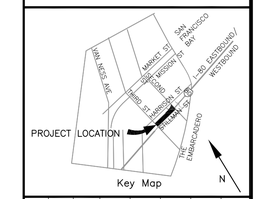

REVISIONS

NO.	DATE	DESCRIPTION	BY
A	10–31–16	ISSUED FOR BID	JC
B	02–07–17	REVISED PER DSA COMMENTS	JC

CONTRACT NO. 17–05–BSF–000

PROJECT TITLE: TRANSBAY TRANSIT CENTER PROGRAM BUS STORAGE FACILITY SAN FRANCISCO, CA

SHEET TITLE: ENLARGED SITE PLAN – EAST

ARCHITECT/ENGINEER SEAL

APPROVED: T. POST
PRINCIPAL ENGINEER / ARCHITECT
APPROVED: M. WOOD
PROJECT MANAGER
APPROVED: J. CANALES
PROJECT ENGINEER / ARCHITECT

DESIGNED BY: J. CANALES	CHECKED BY: D. MLODZIK
DRAWN BY: J. LEE	DATE: 02/07/17
SCALE: 1"=20'	FACILITY NO. 160 / REVISION B
SHEET NUMBER A–1032	SEQUENCE NUMBER 73 of 256

Copyright 2006 by the City and County of San Francisco. These documents are the sole property of the City and County of San Francisco and are protected by the Copyright Act. Any reproduction, publication, or use by any method, in whole or in part, without the express written consent of the Transbay Joint Powers Authority Commission is prohibited.

XREF'S: XBSCSITE.dwg\, XBSASITE.dwg\, XBSC3TRUE.dwg\, XSURVEYBSE.dwg\, XBSCSTRUE.dwg\, XSURVEYLOTS.dwg\, XBSSFNWALL.dwg\, XBSSBRIDGE.dwg\, XBSLSITE.dwg\, XBSGGRADE.dwg\, XSURVEYLOTS.dwg
LUC: Feb 06, 2017 - 2:57pm C:\pwworking\ou1\uac\d0820283\n1032.dwg

DIST	COUNTY	ROUTE	POST MILES TOTAL PROJECT	SHEET No	TOTAL SHEETS
04	SF	80	4.9/5.9	1153	1511

REGISTERED CIVIL ENGINEER 12-03-01

6-17-02
PLANS APPROVAL DATE

REGISTERED PROFESSIONAL ENGINEER G. Setberg No. 47829 Exp. 12-31-03 CIVIL STATE OF CALIFORNIA

The State of California or its officers or agents shall not be responsible for the accuracy or completeness of electronic copies of this plan sheet.

Caltrans now has a web site! To get to the web site, go to: http://www.dot.ca.gov

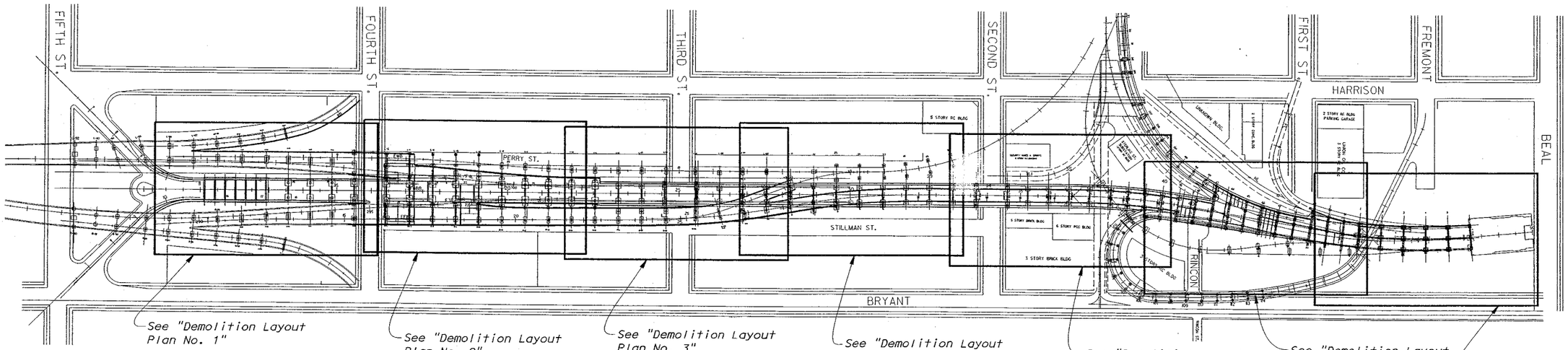

PLAN

1" = 150'

GENERAL NOTES:

1. *Not all Electroliers shown. Total 55 Electroliers Westbound and Eastbound to be removed.*
2. *Earthquake Restrainers not shown.*
3. *Intermediate Floorbeams of reinforced concrete T-Beam structure prestressed in Spans 6 to 37, 41 and 42. Two Tendons stressed to 95000 lb± each in Spans 6 to 37. One Tendon stressed to 90000 lb± each in Spans 41 and 42.*
4. *Girders prestressed between hinges in Spans 7,9,11,13,15,18,20,23,26,29,31,34 and 37 of the reinforced concrete T-Beam structure with two tendons, one at 86000 lb± and one at 43000 lb±. Girders in Spans 33 prestressed to 86000 lb± each tendon (tot 2).*
5. *Bent Cap prestressing shown on Bent Detail sheets.*

NOTE:
THE CONTRACTOR SHALL VERIFY ALL CONTROLLING FIELD DIMENSIONS BEFORE ORDERING OR FABRICATING ANY MATERIAL.

	BY	CHECKED
DESIGN	K. Bhala	J. Zhang
DETAILS	J. Klovach	J. Zhang
QUANTITIES	D. Abellon	K. Bhala

SFOBB - SEISMIC RETROFIT PROJECT NO. 12

STATE OF CALIFORNIA DEPARTMENT OF TRANSPORTATION

DIVISION OF STRUCTURES STRUCTURE DESIGN 2

BRIDGE NO. 34-0126RL
POST MILE 5.07/5.67

SFOBB - SAN FRANCISCO APPROACH (REPLACE

MAINLINE

PROJECT PLAN DEMOLITION LAYOUT

STRUCTURES DESIGN DETAIL SHEET (ENGLISH) (REV. 1/1/99)

ORIGINAL SCALE IN INCHES FOR REDUCED PLANS 0 1 2 3

CU 04
EA 0435V1

FILE => amsdipp.dgn

DISREGARD PRINTS BEARING EARLIER REVISION DATES

REVISION DATES (PRELIMINARY STAGE ONLY) 11-30-00 6-21-01 7-30-01 9-18-01

SHEET 272 OF 419

USERNAME => trg DATE PLOTTED => 27-JUN-2002 TIME PLOTTED => 13:37

NOTE;
THE CONTRACTOR SHALL VERIFY ALL CONTROLLING FIELD DIMENSIONS BEFORE ORDERING OR FABRICATING ANY MATERIAL.

Notes:

1. For Sections A-A, B-B, C-C & D-D* details, see *Demolition Detail Cellular Structure & Approach* sheet.
2. All lengths measure along existing SFOBB Line.

LEGEND

- Indicates Demolition Limits
- Indicates Limits of Stage 2 Bridge Removal
- Indicates Limits of Stage 3 Bridge Removal

Caltrans now has a web site! To get to the web site, go to: http://www.dot.ca.gov

04	SF	80	4.9/5.9	1154R1	1511

REGISTERED CIVIL ENGINEER 12-03-01

6-17-02
PLANS APPROVAL DATE

The State of California or its officers or agents shall not be responsible for the accuracy or completeness of electronic copies of this plan sheet.

REGISTERED PROFESSIONAL ENGINEER G. Setberg No. 47829 Exp. 12-31-03 CIVIL STATE OF CALIFORNIA

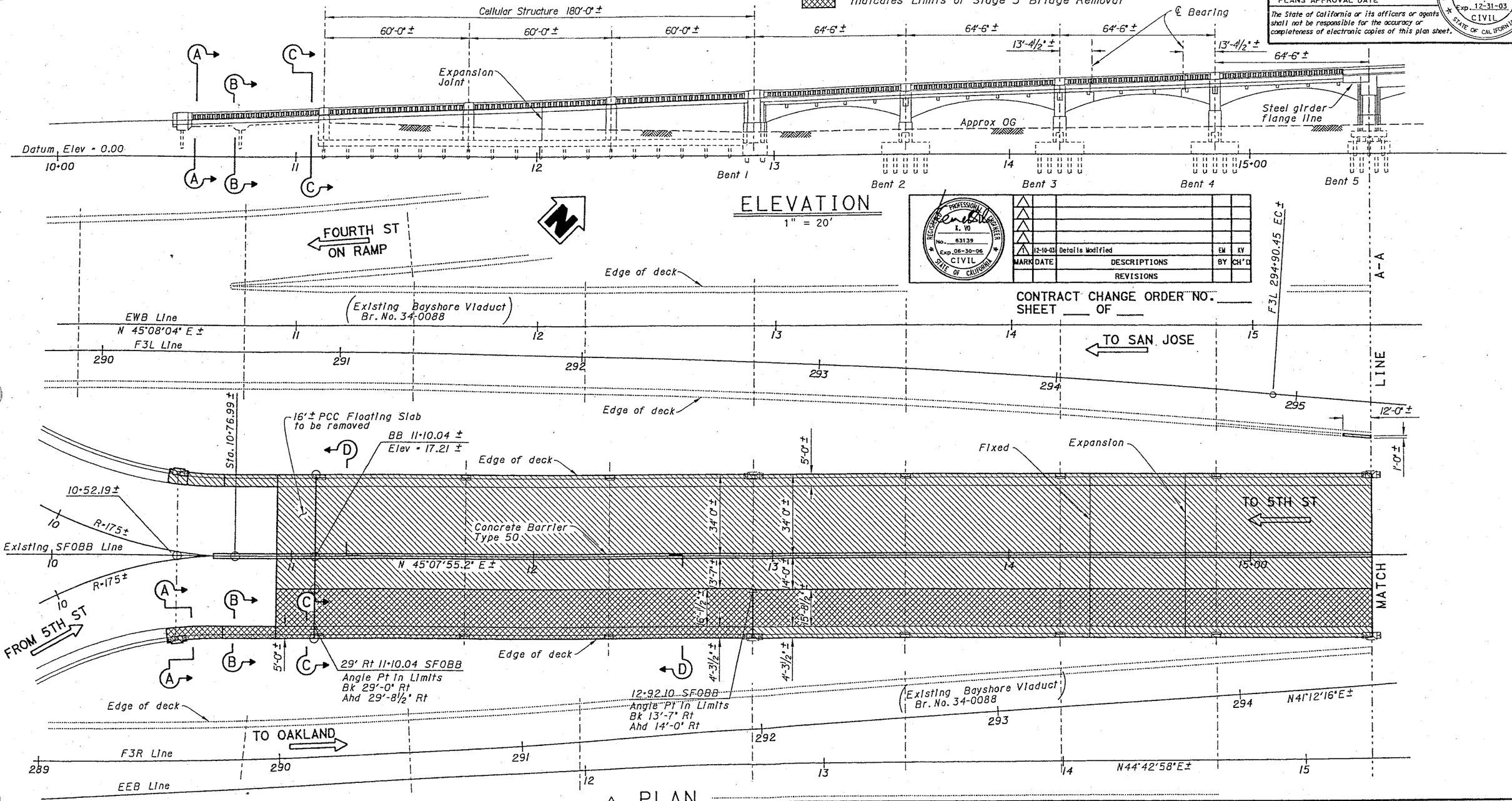

ELEVATION
1" = 20'

1 PLAN
1" = 20'

MARK	DATE	DESCRIPTIONS	BY	CH'D
1	12-10-03	Details Modified	EM	KV

REVISIONS

PROFESSIONAL ENGINEER K. VO No. 63139 Exp. 06-30-06 CIVIL STATE OF CALIFORNIA

CONTRACT CHANGE ORDER NO. ____
SHEET ____ OF ____

SFOBB - SEISMIC RETROFIT PROJECT NO. 12

SFOBB - SAN FRANCISCO APPROACH (REPLACE

DESIGN	K. Bhala	CHECKED	J. Zhang
DETAILS	FD/JK/RN/DE	CHECKED	J. Zhang
QUANTITIES	P. Von Savoye	CHECKED	K. Bhala

STATE OF CALIFORNIA
DEPARTMENT OF TRANSPORTATION

DIVISION OF STRUCTURES
STRUCTURE DESIGN 2

BRIDGE NO. 34-0126RL
POST MILE 5.07/5.67

MAINLINE
DEMOLITION LAYOUT PLAN NO.1

STRUCTURES DESIGN DETAIL SHEET (ENGLISH) (REV. 1/1/99)

ORIGINAL SCALE IN INCHES FOR REDUCED PLANS 0 1 2 3

CU 04
EA 0435V1

DISREGARD PRINTS BEARING EARLIER REVISION DATES

REVISION DATES (PRELIMINARY STAGE ONLY) 7-25-00 7-27-00 8-7-00 8-18-00 9-26-00 11-14-00 6-28-01 7-22-01

SHEET 273 OF 419

FILE => amtalp01.dgn

NOTE;
THE CONTRACTOR SHALL VERIFY ALL CONTROLLING FIELD DIMENSIONS BEFORE ORDERING OR FABRICATING ANY MATERIAL.

LEGEND

Indicates Demolition Limits

Indicates Limits of Stage 1 Bridge Removal

Indicates Limits of Stage 2 Bridge Removal

Indicates Limits of Stage 3 Bridge Removal

Indicates Limits of Stage 5 Bridge Removal

Note: All lengths measured along existing SFOBB Line.

Caltrans now has a web site! To get to the web site, go to: http://www.dot.ca.gov

DIST	COUNTY	ROUTE	POST MILES TOTAL PROJECT	SHEET No	TOTAL SHEETS
04	SF	80	4.9/5.9	1155	1511

REGISTERED CIVIL ENGINEER 12-03-01

6-17-02
PLANS APPROVAL DATE

REGISTERED PROFESSIONAL ENGINEER G. Setberg No. 47829 Exp. 12-31-03 CIVIL STATE OF CALIFORNIA

The State of California or its officers or agents shall not be responsible for the accuracy or completeness of electronic copies of this plan sheet.

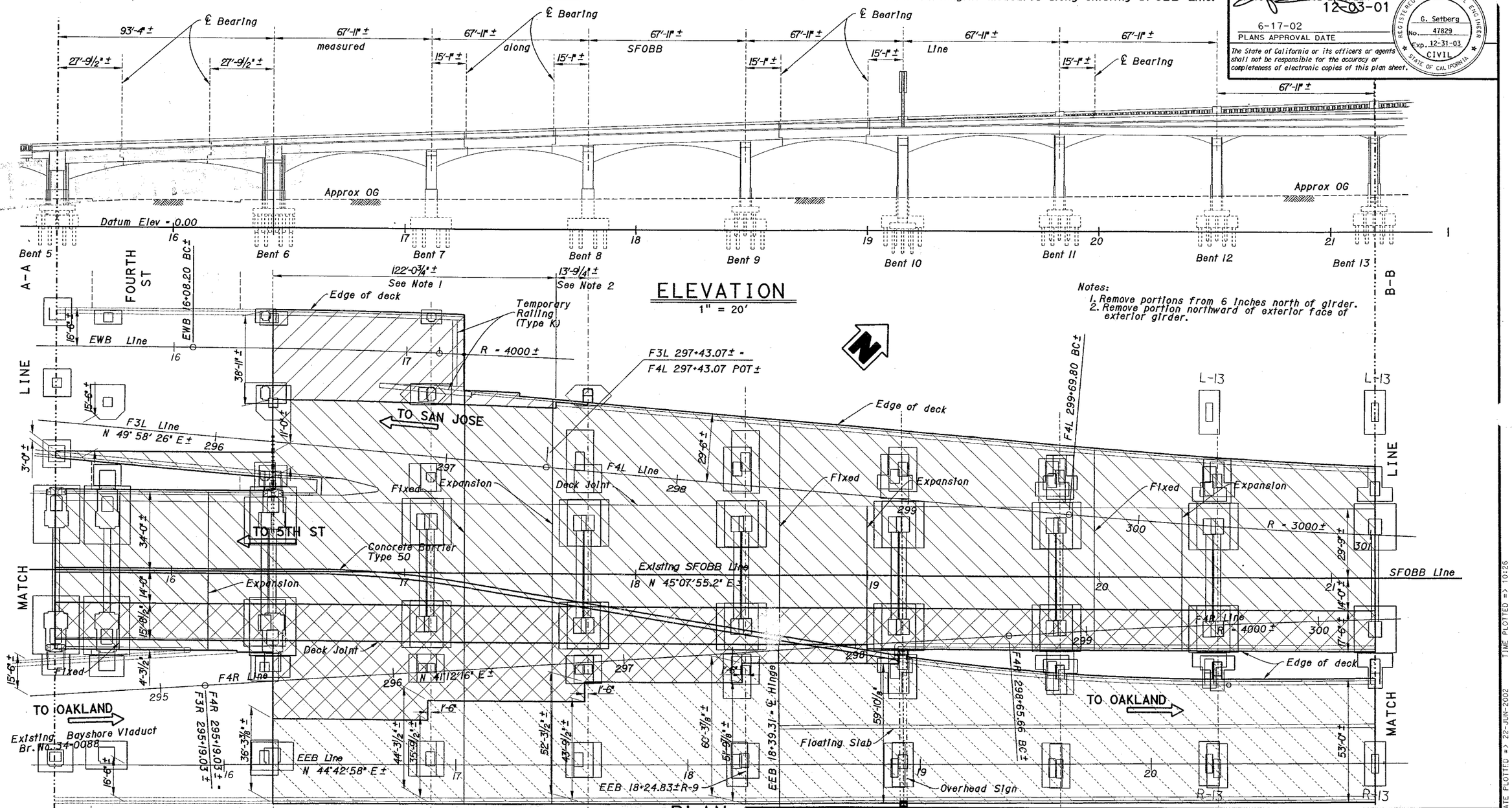

ELEVATION
1" = 20'

Notes:
1. Remove portions from 6 inches north of girder.
2. Remove portion northward of exterior face of exterior girder.

PLAN
1" = 20'

DESIGN	BY K. Bhala	CHECKED J. Zhang	
DETAILS	BY FD/JK/RN	CHECKED J. Zhang	
QUANTITIES	BY P. Von Savoye	CHECKED K. Bhala	

SFOBB - SEISMIC RETROFIT PROJECT NO. 12

SFOBB - SAN FRANCISCO APPROACH (REPLACE

STATE OF CALIFORNIA DEPARTMENT OF TRANSPORTATION

DIVISION OF STRUCTURES STRUCTURE DESIGN 2

BRIDGE NO. 34-0126RL
POST MILE 5.07/5.67

MAINLINE
DEMOLITION LAYOUT PLAN NO.2

STRUCTURES DESIGN DETAIL SHEET (ENGLISH) (REV. 1/1/99)

ORIGINAL SCALE IN INCHES FOR REDUCED PLANS 0 1 2 3

CU 04
EA 0435V1

DISREGARD PRINTS BEARING EARLIER REVISION DATES

REVISION DATES (PRELIMINARY STAGE ONLY) 1-20-00 1-27-00 8-8-00 8-28-00 11-16-00 4-24-01

SHEET 274 OF 419

FILE => amtdlp02.dgn

USERNAME => tmc DATE PLOTTED => 22-JUN-2002 TIME PLOTTED => 10:26

NOTE;
THE CONTRACTOR SHALL VERIFY ALL CONTROLLING FIELD DIMENSIONS BEFORE ORDERING OR FABRICATING ANY MATERIAL.

Note: All lengths measured along existing SFOBB Line.

Caltrans now has a web site! To get to the web site, go to: http://www.dot.ca.gov

DIST	COUNTY	ROUTE	POST MILES TOTAL PROJECT	SHEET No	TOTAL SHEETS
04	SF	80	4.9/5.9	1156	1511

REGISTERED CIVIL ENGINEER 12-03-01

6-17-02
PLANS APPROVAL DATE

REGISTERED PROFESSIONAL ENGINEER G. Setberg No. 47829 Exp. 12-31-03 CIVIL STATE OF CALIFORNIA

The State of California or its officers or agents shall not be responsible for the accuracy or completeness of electronic copies of this plan sheet.

LEGEND

- Indicates Demolition Limits
- Indicates Limits of Stage 1 Bridge Removal
- Indicates Limits of Stage 2 Bridge Removal
- Indicates Limits of Stage 3 Bridge Removal
- Indicates Limits of Stage 5 Bridge Removal

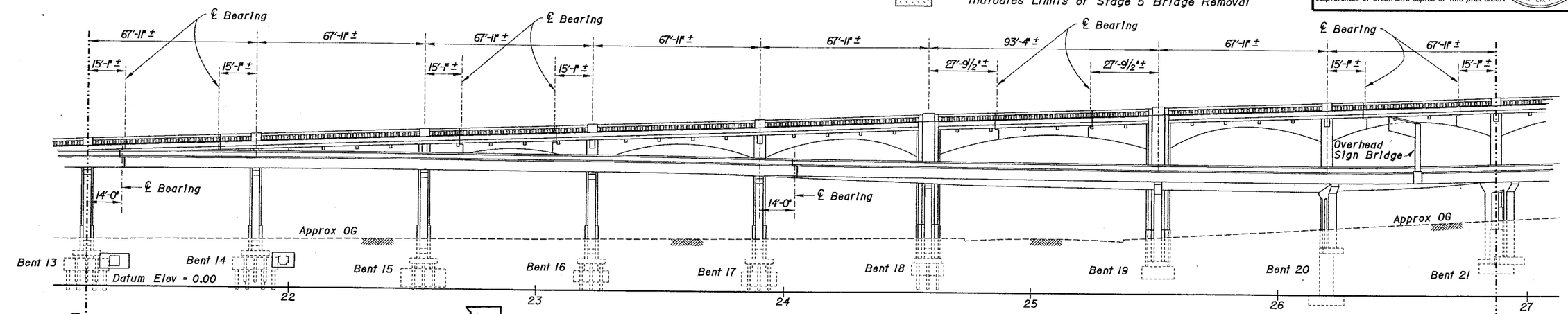

ELEVATION
1" = 20'

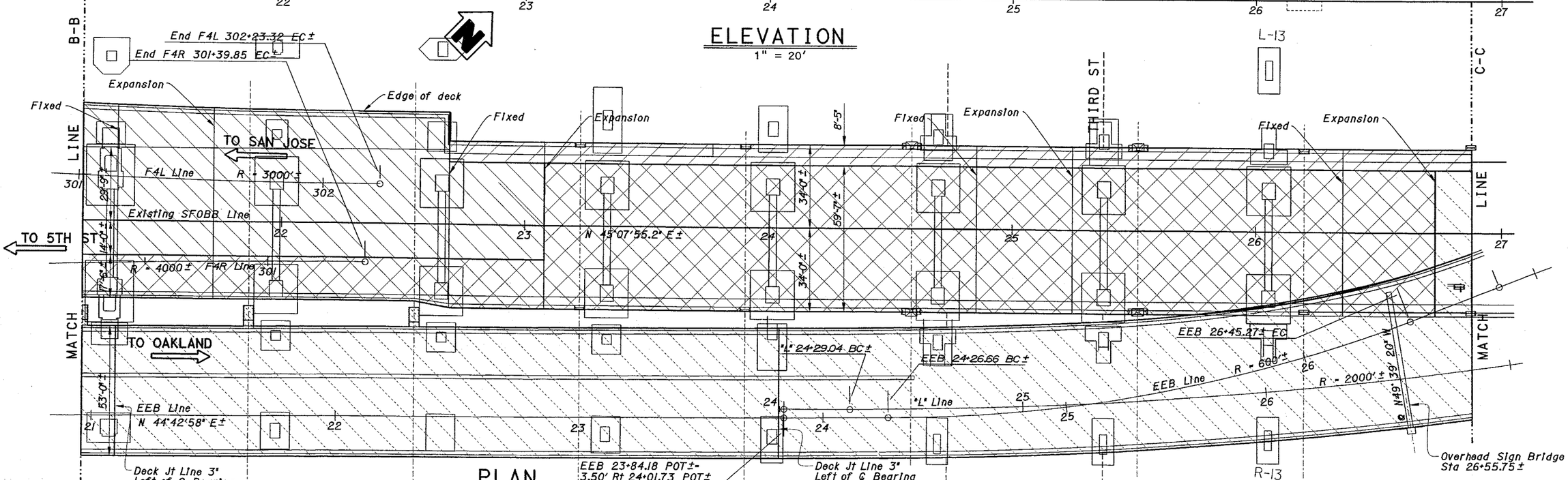

PLAN
1" = 20'

	BY	CHECKED
DESIGN	K. Bhala	J. Zhang
DETAILS	FD/RN	J. Zhang
QUANTITIES	P. Von Savoye	K. Bhala

STATE OF CALIFORNIA
DEPARTMENT OF TRANSPORTATION

DIVISION OF STRUCTURES
STRUCTURE DESIGN 2

SFOBB - SEISMIC RETROFIT PROJECT NO. 12

SFOBB - SAN FRANCISCO APPROACH (REPLACE)

BRIDGE NO. 34-0126RL
POST MILE 5.07/5.67

MAINLINE
DEMOLITION LAYOUT PLAN NO.3

STRUCTURES DESIGN DETAIL SHEET (ENGLISH) (REV. 1/1/99)

ORIGINAL SCALE IN INCHES FOR REDUCED PLANS 0 1 2 3

CU 04
EA 0435V1

FILE => amtdlp03.dgn

DISREGARD PRINTS BEARING EARLIER REVISION DATES

REVISION DATES (PRELIMINARY STAGE ONLY) 7-26-00 7-27-00 8-9-00 8-17-00 8-18-00 11-18-00 4-26-01

SHEET 275 OF 419

USERNAME => tranguye DATE PLOTTED => 22-JUN-2002 TIME PLOTTED => 10:07

Caltrans now has a web site! To get to the web site, go to: http://www.dot.ca.gov

DIST	COUNTY	ROUTE	POST MILES TOTAL PROJECT	SHEET No	TOTAL SHEETS
04	SF	80	4.9/5.9	1157	1511

REGISTERED CIVIL ENGINEER 12-03-01

6-17-02
PLANS APPROVAL DATE

REGISTERED PROFESSIONAL ENGINEER G. Setberg No. 47829 Exp. 12-31-03 CIVIL STATE OF CALIFORNIA

The State of California or its officers or agents shall not be responsible for the accuracy or completeness of electronic copies of this plan sheet.

Legend:

Limits of Stage 1 Bridge Removal

Limits of Stage 5 Bridge Removal

Notes:

1. For details not shown see "Demolition Details Bent No. 21" through "Demolition Details Bents No. 29, 30, 33, 34 and 35" sheets.
2. Upper deck bridge removal details shown, for lower deck see "Demolition Layout Plan No. 5" sheet.
3. Not all adjacent structures shown, see "Foundation Plan" sheet.
4. Not all electroliers shown.
5. All lengths measured along existing SFOBB Line.

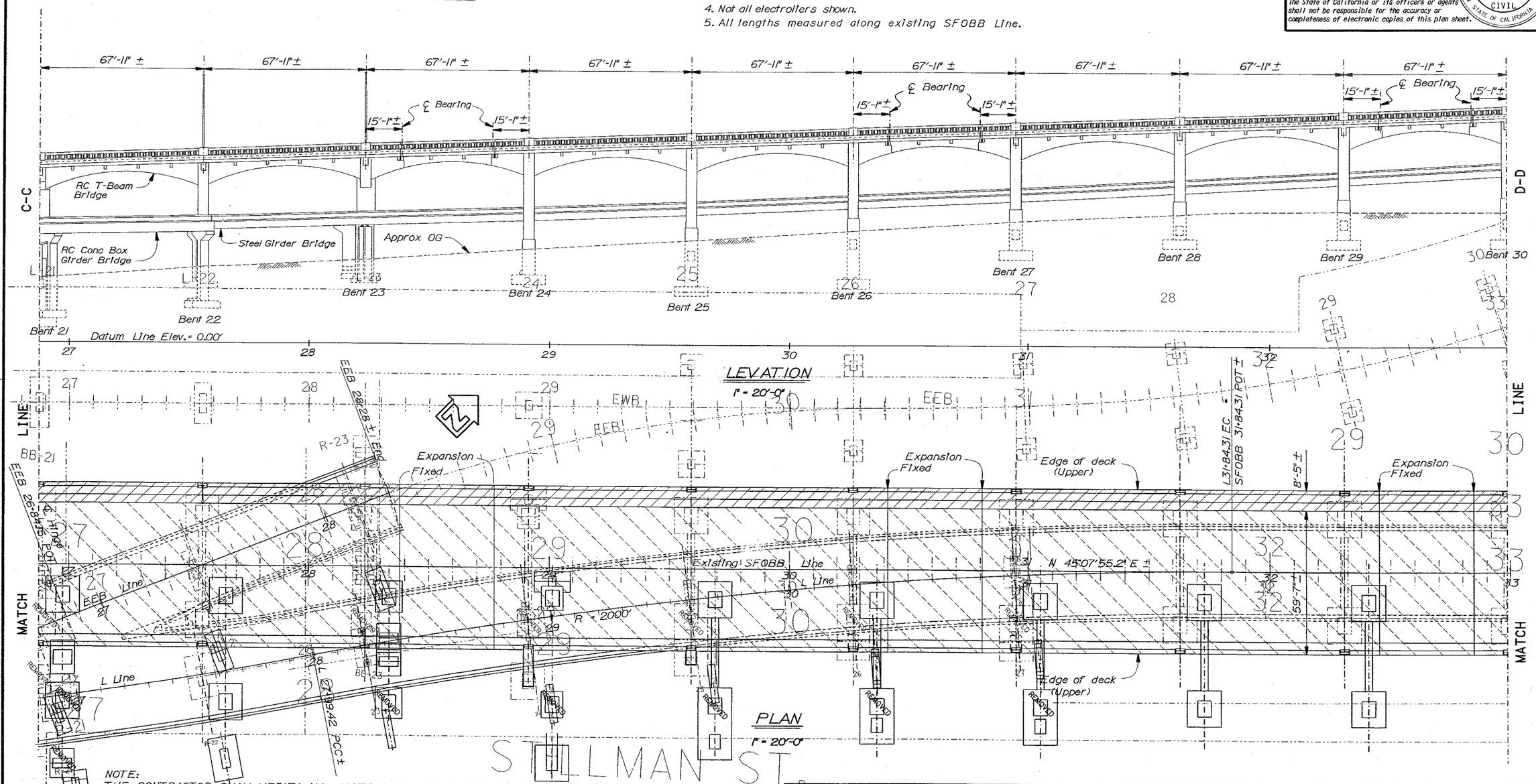

NOTE:
THE CONTRACTOR SHALL VERIFY ALL CONTROLLING FIELD DIMENSIONS BEFORE ORDERING OR FABRICATING ANY MATERIAL.

	BY	CHECKED
DESIGN	K. Bhala	J. Zhang
DETAILS	JK/FD/MH	J. Zhang
QUANTITIES	M. Herron	K. Bhala

SFOBB - SEISMIC RETROFIT PROJECT NO. 12

STATE OF CALIFORNIA DEPARTMENT OF TRANSPORTATION

DIVISION OF STRUCTURES STRUCTURE DESIGN 2

BRIDGE NO. 34-0126RL

POST MILE 5.00/5.67

SFOBB - SAN FRANCISCO APPROACH (REPLACE)

MAINLINE

DEMOLITION LAYOUT PLAN NO. 4

STRUCTURES DESIGN DETAIL SHEET (ENGLISH) (REV. 1/1/99)

ORIGINAL SCALE IN INCHES FOR REDUCED PLANS 0 1 2 3

CU 04
EA 0435V1

FILE => amtdlp04.dgn

DISREGARD PRINTS BEARING EARLIER REVISION DATES

REVISION DATES (PRELIMINARY STAGE ONLY) 10-26-00 10-31-00 10-12-00 10-30-00 11/15/00 11/29/00 4/26/01 6-23-01

SHEET 276 OF 419

DATE PLOTTED => 22-JUN-2002 TIME PLOTTED => 10:07

USERNAME => TRE

Caltrans now has a web site! To get to the web site, go to: http://www.dot.ca.gov

DIST	COUNTY	ROUTE	POST MILES TOTAL PROJECT	SHEET No	TOTAL SHEETS
04	SF	80	4.9/5.9	1158	1511

REGISTERED CIVIL ENGINEER 12-03-01

6-17-02
PLANS APPROVAL DATE

REGISTERED PROFESSIONAL ENGINEER G. Setberg No. 47829 Exp. 12-31-03 CIVIL STATE OF CALIFORNIA

The State of California or its officers or agents shall not be responsible for the accuracy or completeness of electronic copies of this plan sheet.

Legend:

Limits of Stage 5 Bridge Removal

Notes:

1. For details not shown see "Demolition Details Bent No.21" through "Bent Details No. 29,30,33,34 and 35" sheets.
2. Lower deck bridge removal details shown. For upper deck see "Demolition Layout Plan No.4" sheet.
3. Not all adjacent structures shown, see "Foundation Plan" sheet.
4. Not all electroliers shown.
5. All lengths measured along existing SFOBB Line.

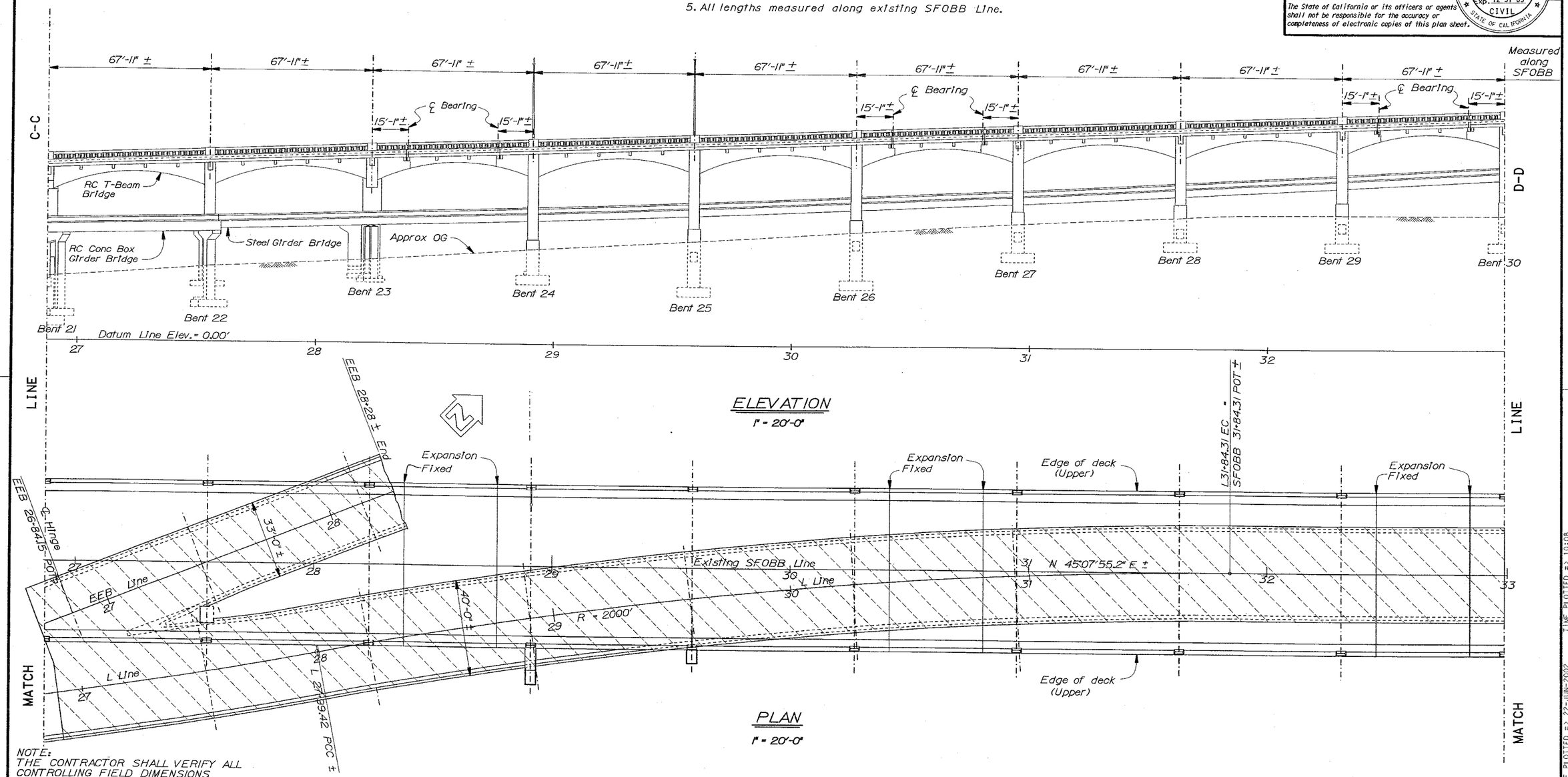

NOTE:
THE CONTRACTOR SHALL VERIFY ALL CONTROLLING FIELD DIMENSIONS BEFORE ORDERING OR FABRICATING ANY MATERIAL.

	BY	CHECKED
DESIGN	K. Bhala	J. Zhang
DETAILS	JK/FD/MH	J. Zhang
QUANTITIES	M. Herron	K. Bhala

STRUCTURES DESIGN DETAIL SHEET (ENGLISH) (REV. 1/1/99)

ORIGINAL SCALE IN INCHES FOR REDUCED PLANS 0 1 2 3

SFOBB - SEISMIC RETROFIT PROJECT NO. 12

STATE OF CALIFORNIA DEPARTMENT OF TRANSPORTATION

DIVISION OF STRUCTURES STRUCTURE DESIGN 2

CU 04
EA 0435V1

BRIDGE NO. 34-0126RL
POST MILE 5.07/5.67

SFOBB - SAN FRANCISCO APPROACH (REPLACE)

MAINLINE

DEMOLITION LAYOUT PLAN NO.5

DISREGARD PRINTS BEARING EARLIER REVISION DATES

REVISION DATES (PRELIMINARY STAGE ONLY) 10-10-00 10-11-00 10-12-00 10-30-00 10-31-00 11-29-00 4-26-01

SHEET 277 OF 419

FILE => amfdlp05.dgn

USERNAME => trmnguye DATE PLOTTED => 22-JUN-2002 TIME PLOTTED => 10:08

Legend:

Limits of Stage 1 Bridge Removal

Limits of Stage 5 Bridge Removal

Notes:

1. For details not shown see "Demolition Details Bents No.29,30,33,34 and 35" through "Demolition Details Bent No.40" sheets.
2. Upper deck bridge removal details shown. For lower deck see "Demolition Layout Plan No.7" sheet.
3. Not all adjacent structures shown, see "Foundation Plan" sheet.
4. For Harrison Street Off-Ramp removal details see "SFOBB Seismic Retrofit Project No.13" plans.
5. Not all electroliers shown.
6. All lengths measured along existing SFOBB Line.

Caltrans now has a web site! To get to the web site, go to: http://www.dot.ca.gov

DIST	COUNTY	ROUTE	POST MILES TOTAL PROJECT	SHEET No	TOTAL SHEETS
04	SF	80	4.9/5.9	1159	1511

REGISTERED CIVIL ENGINEER 12-03-01

6-17-02
PLANS APPROVAL DATE

REGISTERED PROFESSIONAL ENGINEER G. Setberg No. 47829 Exp. 12-31-03 CIVIL STATE OF CALIFORNIA

The State of California or its officers or agents shall not be responsible for the accuracy or completeness of electronic copies of this plan sheet.

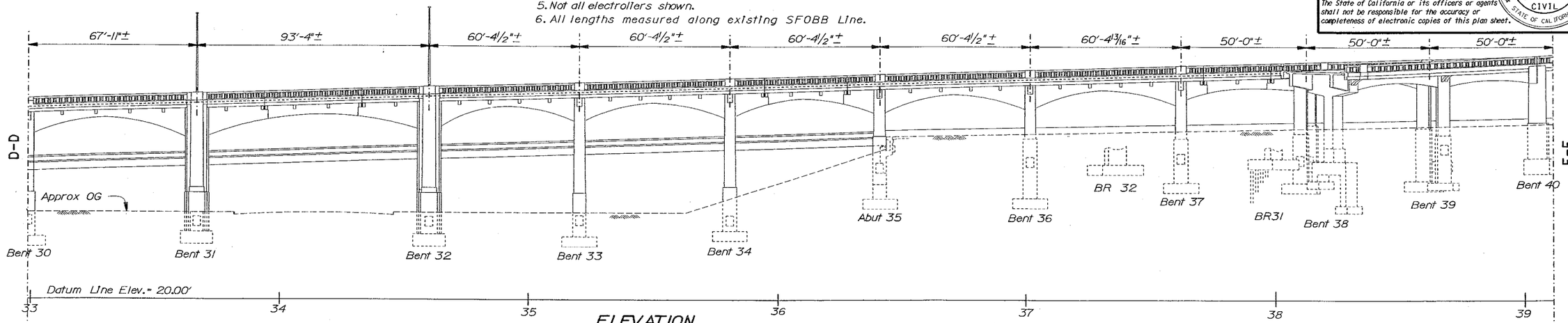

ELEVATION
1" = 20'-0"

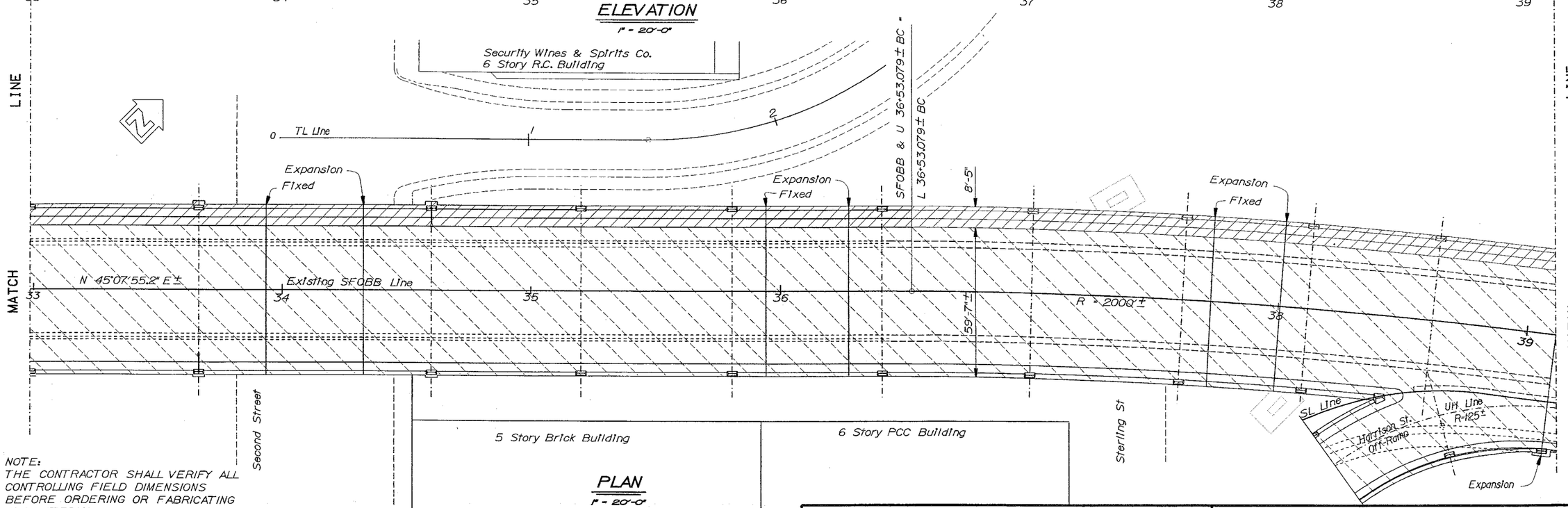

PLAN
1" = 20'-0"

NOTE:
THE CONTRACTOR SHALL VERIFY ALL CONTROLLING FIELD DIMENSIONS BEFORE ORDERING OR FABRICATING ANY MATERIAL.

	BY	CHECKED
DESIGN	K. Bhala	J. Zhang
DETAILS	JK/FD/MH	J. Zhang
QUANTITIES	M. Herron	K. Bhala

SFOBB - SEISMIC RETROFIT PROJECT NO. 12

STATE OF CALIFORNIA
DEPARTMENT OF TRANSPORTATION

DIVISION OF STRUCTURES
STRUCTURE DESIGN 2

BRIDGE NO. 34-0126RL
POST MILE 5.07/5.67

SFOBB - SAN FRANCISCO APPROACH (REPLACE

MAINLINE

DEMOLITION LAYOUT PLAN NO. 6

STRUCTURES DESIGN DETAIL SHEET (ENGLISH) (REV. 1/1/99)

ORIGINAL SCALE IN INCHES FOR REDUCED PLANS 0 1 2 3

CU 04
EA 0435V1

DISREGARD PRINTS BEARING EARLIER REVISION DATES

REVISION DATES (PRELIMINARY STAGE ONLY) 10-26-00 10-31-00 11-29-00 4-26-01 6-23-01

SHEET 278 OF 419

FILE => omtdlp06.dgn

USERNAME => TIME PLOTTED => 10:08 DATE PLOTTED => 22-JUN-2002

Caltrans now has a web site! To get to the web site, go to: http://www.dot.ca.gov

DIST	COUNTY	ROUTE	POST MILES TOTAL PROJECT	SHEET No	TOTAL SHEETS
04	SF	80	4.9/5.9	1160	1511

REGISTERED CIVIL ENGINEER 12-03-01

6-17-02
PLANS APPROVAL DATE

REGISTERED PROFESSIONAL ENGINEER G. Setberg No. 47829 Exp. 12-31-03 CIVIL STATE OF CALIFORNIA

The State of California or its officers or agents shall not be responsible for the accuracy or completeness of electronic copies of this plan sheet.

Legend:

Limits of Stage 5 Bridge Removal

Notes:
1. For details not shown see "Demolition Details Bents No.29,30,33,34 and 35" through "Demolition Details Bent No.40" sheets.
2. Lower deck bridge removal details shown. For upper deck see "Demolition Layout Plan No. 6" sheet.
3. Not all adjacent structures shown, see "Foundation Plan" sheet.
4. For Harrison Street Off-Ramp removal details see "SFOBB Seismic Retrofit Project No.13" plans.
5. Not all electroliers shown.
6. All lengths measured along existing SFOBB Line.

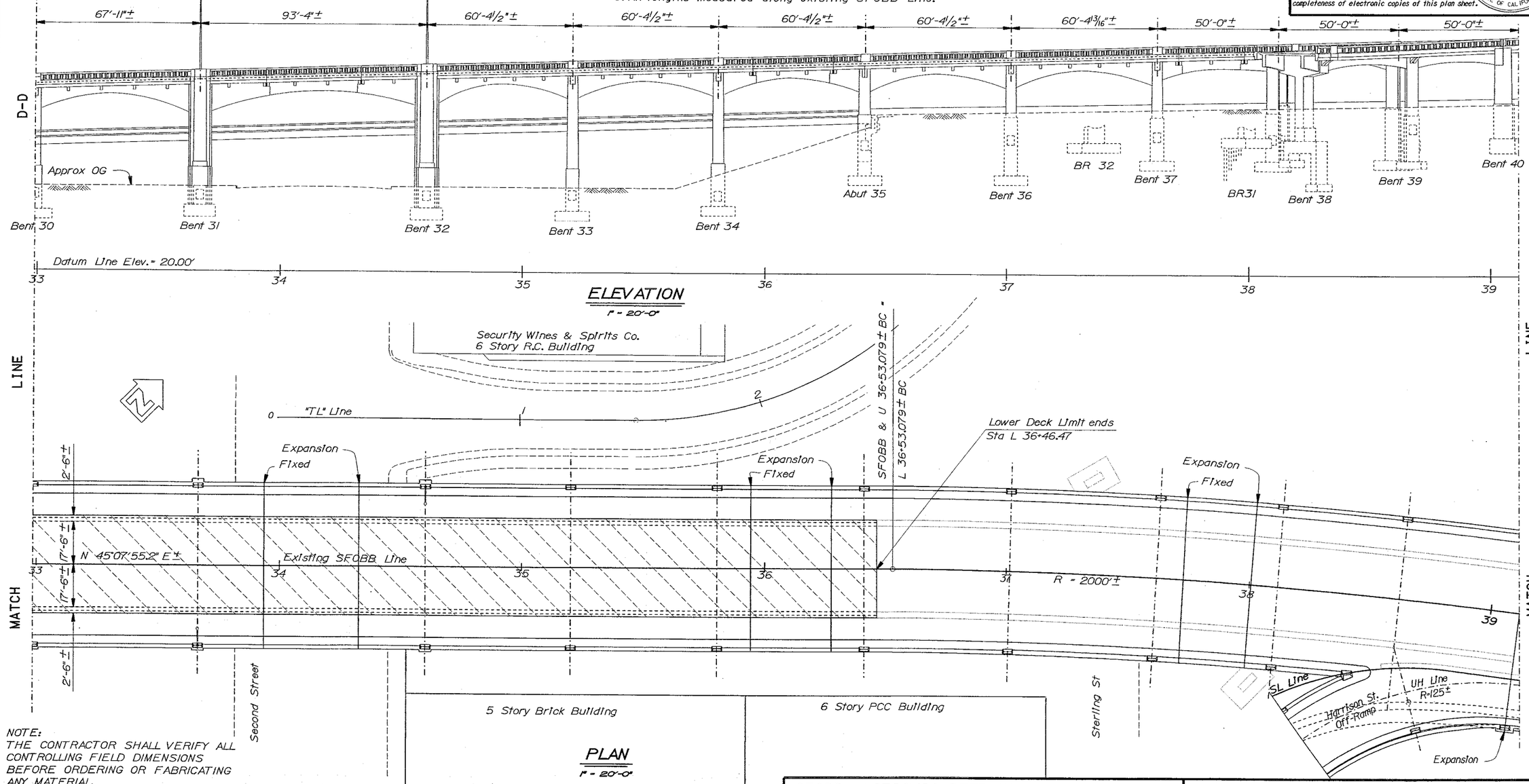

NOTE:
THE CONTRACTOR SHALL VERIFY ALL CONTROLLING FIELD DIMENSIONS BEFORE ORDERING OR FABRICATING ANY MATERIAL.

	BY	CHECKED
DESIGN	K. Bhala	J. Zhang
DETAILS	JK/FD/MH	J. Zhang
QUANTITIES	M. Herron	K. Bhala

STATE OF CALIFORNIA
DEPARTMENT OF TRANSPORTATION

DIVISION OF STRUCTURES
STRUCTURE DESIGN 2

BRIDGE NO. 34-0126RL
POST MILE 5.07/5.67

SFOBB - SEISMIC RETROFIT PROJECT NO. 12

SFOBB - SAN FRANCISCO APPROACH (REPLACE)

MAINLINE

DEMOLITION LAYOUT PLAN NO. 7

CU 04
EA 0435V1

STRUCTURES DESIGN DETAIL SHEET (ENGLISH) (REV. 1/1/99)

ORIGINAL SCALE IN INCHES FOR REDUCED PLANS 0 1 2 3

DISREGARD PRINTS BEARING EARLIER REVISION DATES

REVISION DATES (PRELIMINARY STAGE ONLY) 10-16-00 10-27-00 11-16-00 4-26-01 6-23-01

SHEET 279 OF 419

FILE => amtdlp07.dgn

USERNAME => tranguye DATE PLOTTED => 22-JUN-2002 TIME PLOTTED => 10:09

NOTE:
THE CONTRACTOR SHALL VERIFY ALL CONTROLLING FIELD DIMENSIONS BEFORE ORDERING OR FABRICATING ANY MATERIAL.

LEGEND:

- Limits of Stage 1 Bridge Removal
- Limits of Stage 2 Bridge Removal
- Limits of Stage 4 Bridge Removal
- Limits of Stage 5 Bridge Removal

Notes:

1. For details not shown see "Demolition Details Bent No.40" through "Demolition Details Bent No.50" sheets.
2. Upper deck bridge removal details shown. Lower deck is at grade. For Concrete Barrier Type 50 and Concrete Barrier Type 27 removal see "Road Plans".
3. Not all adjacent structures shown, see "Foundation Plan" sheet.
4. For Freemont St. Off-ramp removal details see "SFOBB-Seismic Retrofit Project No.13" plans.
5. Not all electroliers shown.
6. All lengths measured along existing SFOBB Line.

Caltrans now has a web site! To get to the web site, go to: http://www.dot.ca.gov

DIST	COUNTY	ROUTE	POST MILES TOTAL PROJECT	SHEET No	TOTAL SHEETS
04	SF	80	4.9/5.9	1161	1511

REGISTERED CIVIL ENGINEER 12-03-01

6-17-02
PLANS APPROVAL DATE

REGISTERED PROFESSIONAL ENGINEER G. Setberg No. 47829 Exp. 12-31-03 CIVIL STATE OF CALIFORNIA

The State of California or its officers or agents shall not be responsible for the accuracy or completeness of electronic copies of this plan sheet.

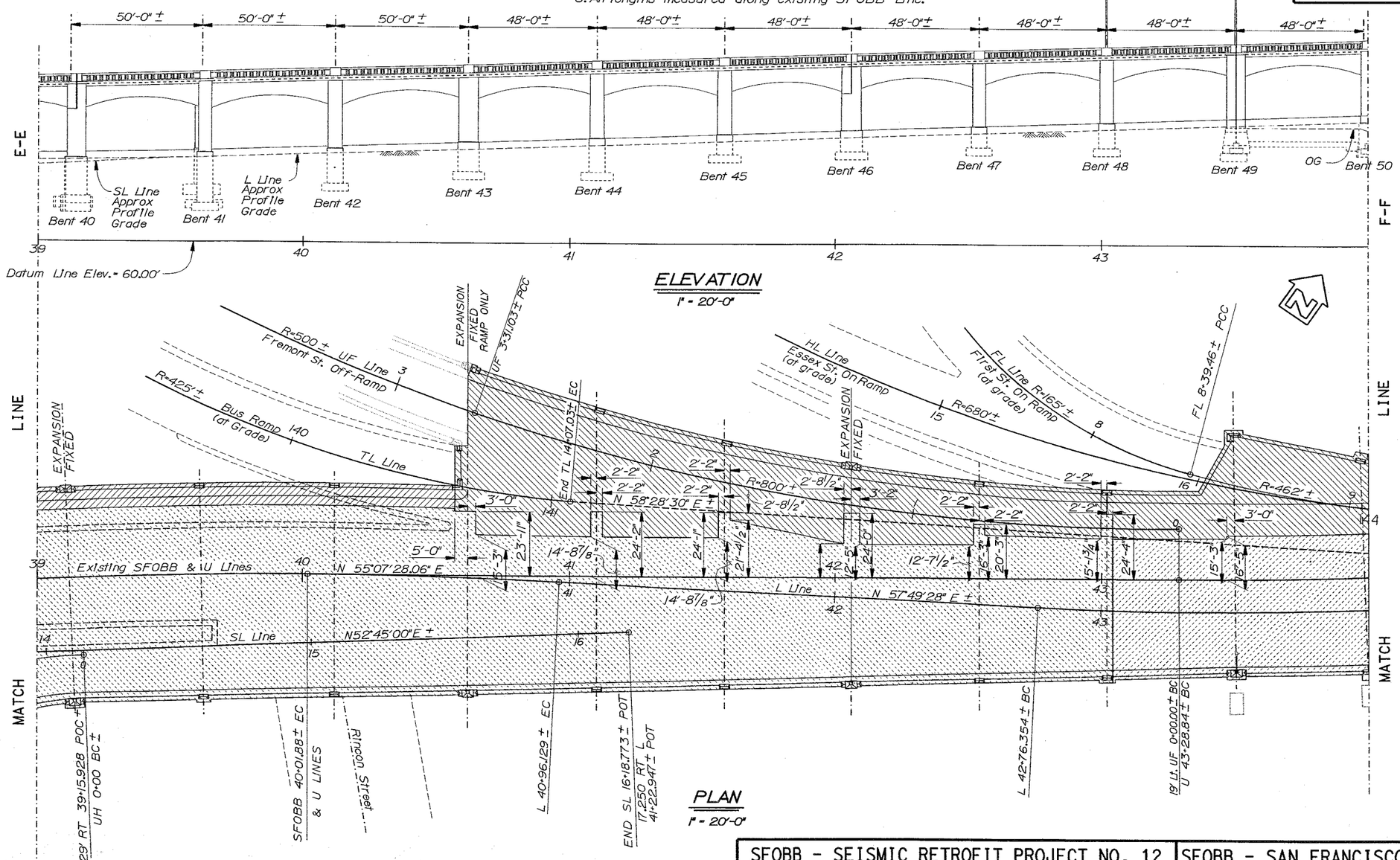

DESIGN	BY K. Bhala	CHECKED J. Zhang	
DETAILS	BY JK/FD/MH/DE	CHECKED J. Zhang	
QUANTITIES	BY M. Herron	CHECKED K. Bhala	

STRUCTURES DESIGN DETAIL SHEET (ENGLISH) (REV. 1/1/99)

ORIGINAL SCALE IN INCHES FOR REDUCED PLANS 0 1 2 3

SFOBB - SEISMIC RETROFIT PROJECT NO. 12

STATE OF CALIFORNIA DEPARTMENT OF TRANSPORTATION

DIVISION OF STRUCTURES STRUCTURE DESIGN 2

BRIDGE NO. 34-0126RL
POST MILE 5.07/5.67

CU 04
EA 0435V1

SFOBB - SAN FRANCISCO APPROACH (REPLACE)

MAINLINE

DEMOLITION LAYOUT PLAN NO.8

DISREGARD PRINTS BEARING EARLIER REVISION DATES

REVISION DATES (PRELIMINARY STAGE ONLY) 11-3-00 11-15-00 5-1-01 6-22-01 7-22-01 9-14-00 10-6-00 10-13-00 11-13-00

SHEET 280 OF 419

FILE => amrdlp08.dgn

USERNAME => TIME PLOTTED => 10:09 DATE PLOTTED => 22-JUN-2002

LEGEND:

- Limits of Stage 1 Bridge Removal
- Limits of Stage 2 Bridge Removal
- Limits of Stage 3 Bridge Removal
- Limits of Stage 4 Bridge Removal

Notes:

1. For details not shown see "Demolition Details Bent No. 50" through "Bent Details No. 8" sheets.
2. Upper deck bridge removal details shown, for lower deck see "Demolition Layout Plan 11" sheet.
3. Not all adjacent structures shown, see "Foundation Plan" sheet.
4. All lengths measured along existing SFOBB Line.

Caltrans now has a web site! To get to the web site, go to: http://www.dot.ca.gov

DIST	COUNTY	ROUTE	POST MILES TOTAL PROJECT	SHEET No	TOTAL SHEETS
04	SF	80	4.9/5.9	1162	1511

REGISTERED CIVIL ENGINEER 12-03-01

6-17-02
PLANS APPROVAL DATE

REGISTERED PROFESSIONAL ENGINEER G. Setberg No. 47829 Exp. 12-31-03 CIVIL STATE OF CALIFORNIA

The State of California or its officers or agents shall not be responsible for the accuracy or completeness of electronic copies of this plan sheet.

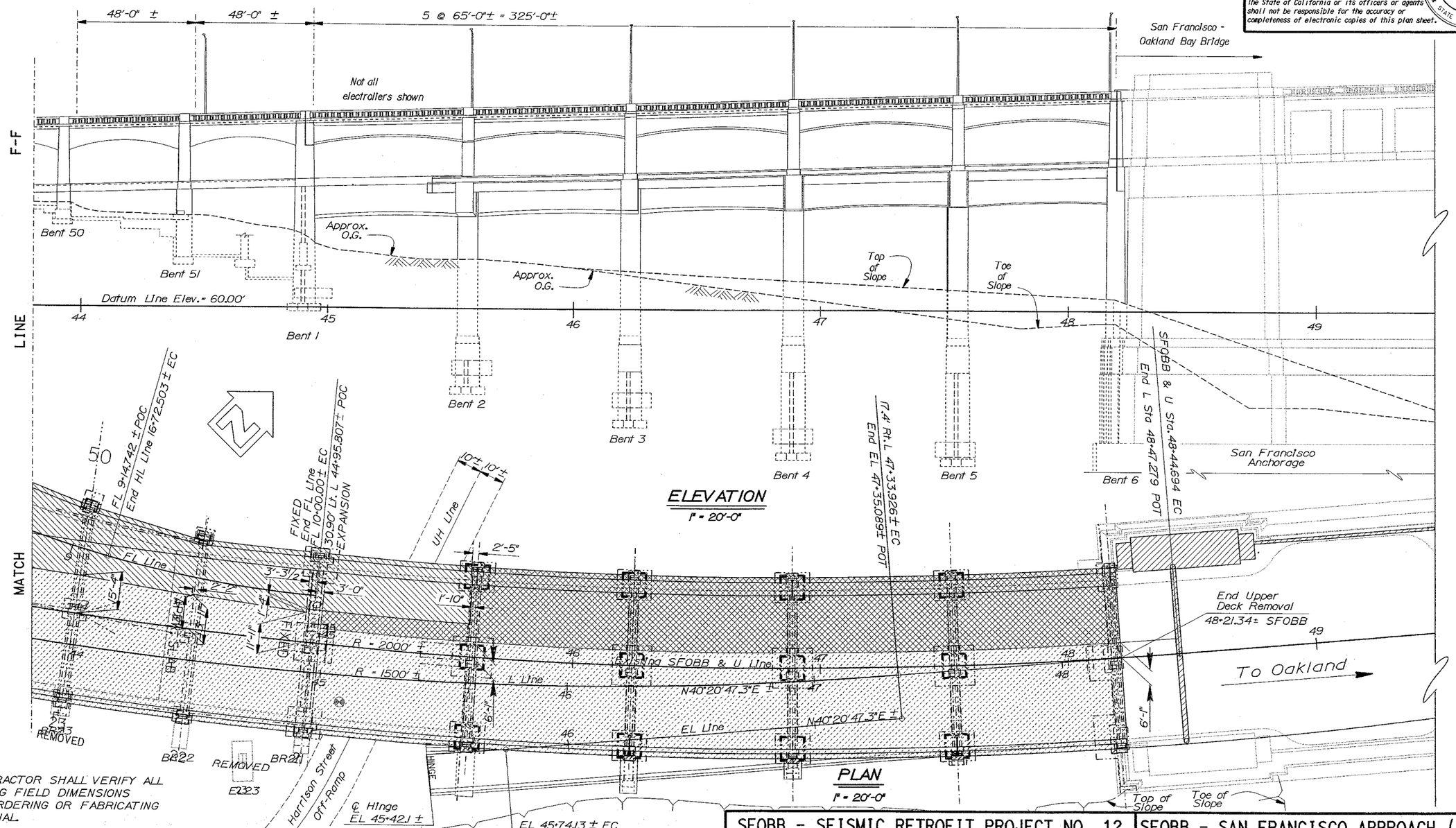

NOTE:
THE CONTRACTOR SHALL VERIFY ALL CONTROLLING FIELD DIMENSIONS BEFORE ORDERING OR FABRICATING ANY MATERIAL.

	BY	CHECKED
DESIGN	K. Bhala	J. Zhang/G. Slocum
DETAILS	JK/FD/MH/DE	J. Zhang
QUANTITIES	M. Herron	K. Bhala

SFOBB - SEISMIC RETROFIT PROJECT NO. 12

STATE OF CALIFORNIA DEPARTMENT OF TRANSPORTATION

DIVISION OF STRUCTURES STRUCTURE DESIGN 2

BRIDGE NO. 34-0126RL
POST MILE 5.07/5.67

SFOBB - SAN FRANCISCO APPROACH (REPLACE)

MAINLINE

DEMOLITION LAYOUT PLAN NO. 9

STRUCTURES DESIGN DETAIL SHEET (ENGLISH) (REV. 1/1/99)

ORIGINAL SCALE IN INCHES FOR REDUCED PLANS 0 1 2 3

CU 04
EA 0435V1

DISREGARD PRINTS BEARING EARLIER REVISION DATES

REVISION DATES (PRELIMINARY STAGE ONLY) 12-03-01 10-5-00 10-11-00 10-31-00 11-15-00 11-28-00 5-9-01 6-25-01 7-25-01

SHEET 281 OF 419

FILE => amtdlp09.dgn

USERNAME => tranguye DATE PLOTTED => 22-JUN-2002 TIME PLOTTED => 10:10

NOTE:
THE CONTRACTOR SHALL VERIFY ALL CONTROLLING FIELD DIMENSIONS BEFORE ORDERING OR FABRICATING ANY MATERIAL.

LEGEND:

Limits of Stage 4 Bridge Removal

Notes:

1. For details not shown see "Demolition Details Bent No.50" through "Bent Details No.6" sheets.
2. Lower deck bridge removal details shown, for upper deck see "Demolition Layout Plan 9" sheet.
3. Not all adjacent structures shown, see "Foundation Plan" sheet.
4. All lengths measured along existing SFOBB Line.
5. Portions of Footing EL23 may need to be removed during the Construction of "Lower Deck Widen and Retrofit" (Stage 4).

Caltrans now has a web site! To get to the web site, go to: http://www.dot.ca.gov

DIST	COUNTY	ROUTE	POST MILES TOTAL PROJECT	SHEET No	TOTAL SHEETS
04	SF	80	4.9/5.9	1163	1511

REGISTERED CIVIL ENGINEER 12-03-01

6-17-02
PLANS APPROVAL DATE

REGISTERED PROFESSIONAL ENGINEER G. Setberg No. 47829 Exp. 12-31-03 CIVIL STATE OF CALIFORNIA

The State of California or its officers or agents shall not be responsible for the accuracy or completeness of electronic copies of this plan sheet.

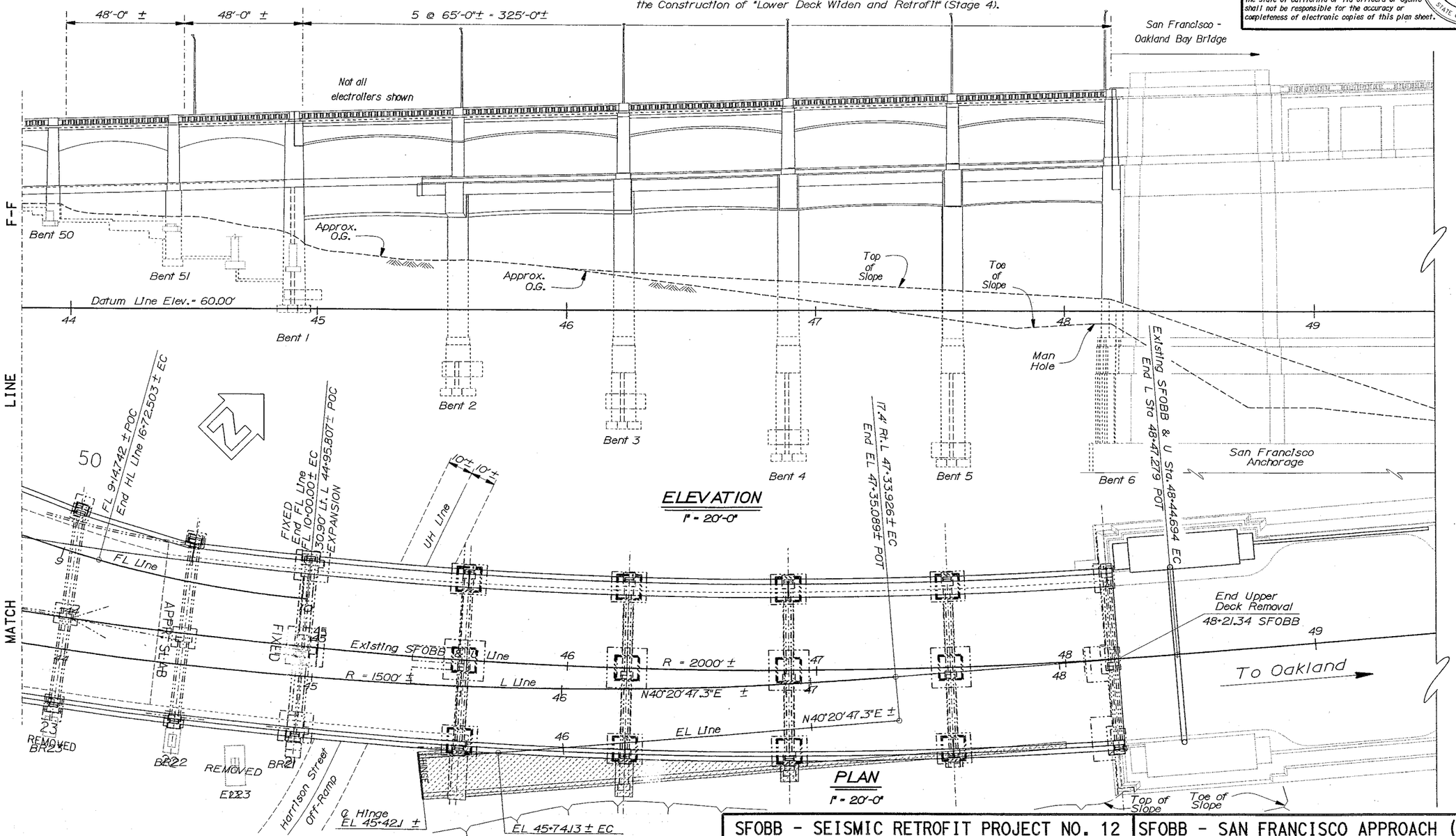

	BY	CHECKED
DESIGN	K. Bhala	J. Zhang
DETAILS	JK/FD/MH/DE	J. Zhang
QUANTITIES	M. Herron	K. Bhala

SFOBB - SEISMIC RETROFIT PROJECT NO. 12

STATE OF CALIFORNIA
DEPARTMENT OF TRANSPORTATION

DIVISION OF STRUCTURES
STRUCTURE DESIGN 2

BRIDGE NO. 34-0126RL
POST MILE 5.00/5.67

SFOBB - SAN FRANCISCO APPROACH (REPLACE

MAINLINE
DEMOLITION LAYOUT PLAN NO. 10

STRUCTURES DESIGN DETAIL SHEET (ENGLISH) (REV. 1/1/99)

ORIGINAL SCALE IN INCHES FOR REDUCED PLANS 0 1 2 3

CU 04
EA 0435V1

DISREGARD PRINTS BEARING EARLIER REVISION DATES

REVISION DATES (PRELIMINARY STAGE ONLY) 10-18-00 11-01 11-15-00 11-29-00 12-05-00 5-9-01 6-28-01 7-22-01

SHEET 282 OF 419

FILE => amtdlp10.dgn

USERNAME => TIME PLOTTED => 10:10 DATE PLOTTED => 22-JUN-2002

04	SF	80	4.9/5.9	1164R1	1511

REGISTERED CIVIL ENGINEER 12-03-01

6-17-02
PLANS APPROVAL DATE

REGISTERED PROFESSIONAL ENGINEER G. Setberg No. 47829 Exp. 12-31-03 CIVIL STATE OF CALIFORNIA

The State of California or its officers or agents shall not be responsible for the accuracy or completeness of electronic copies of this plan sheet.

Caltrans now has a web site! To get to the web site, go to: http://www.dot.ca.gov

Notes:

1. For "Section A-A, B-B, C-C and D-D" locations, see "Demolition Layout Plan No. 1" sheet.

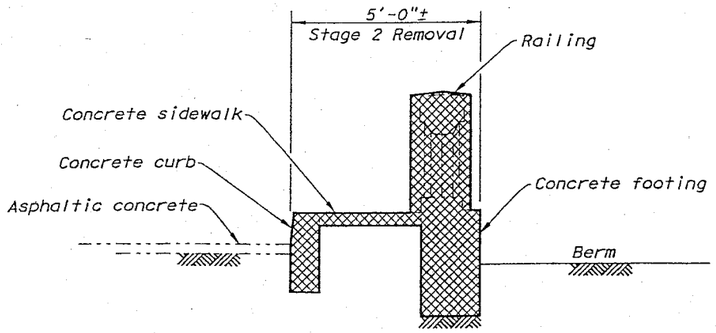

SECTION A-A 1
½" = 1'-0"

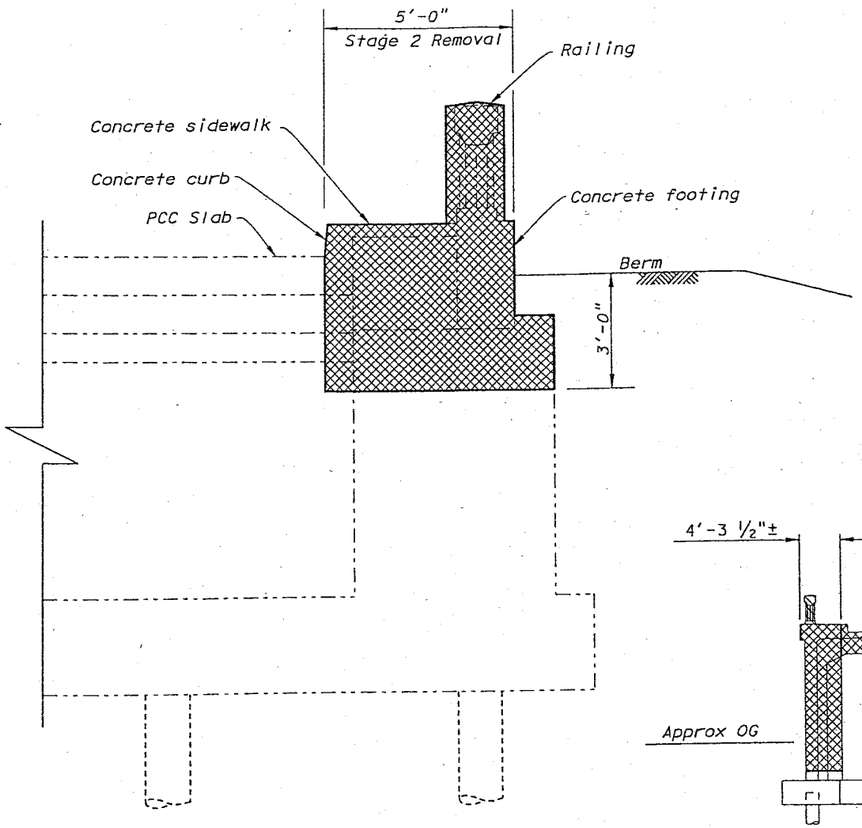

SECTION C-C 1
½" = 1'-0"

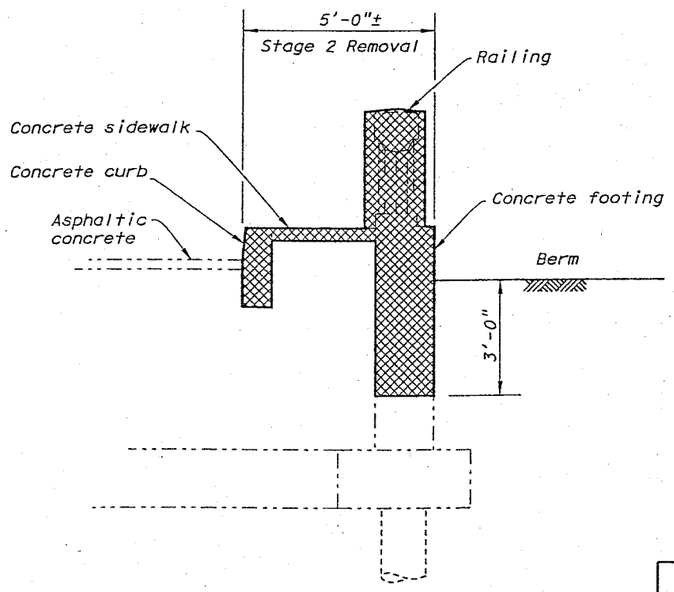

SECTION B-B 1
½" = 1'-0"

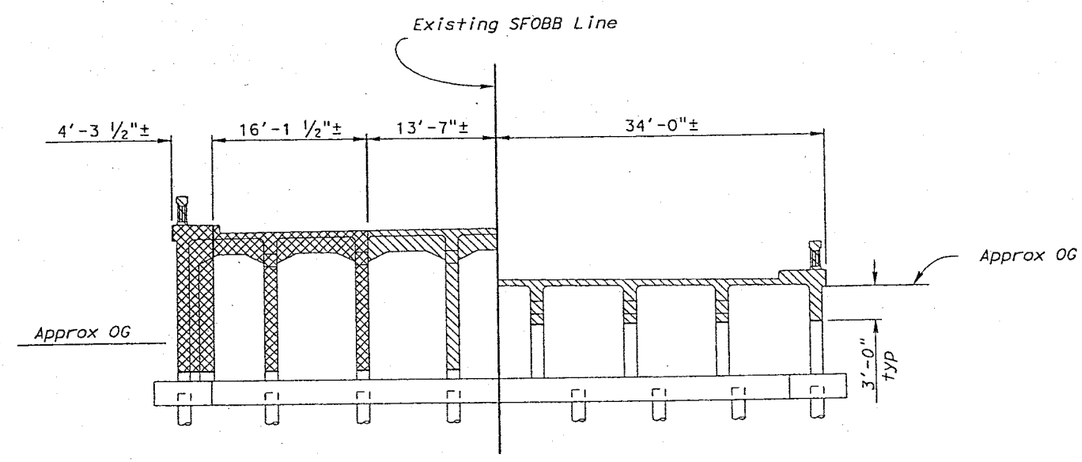

SECTION D-D 1
⅛" = 1'-0"

LEGEND

- Indicates Existing Structure
- Indicates Demolation Limits
- Indicates Limits of Stage 2 Bridge Removal
- Indicates Limits of Stage 3 Bridge Removal

REGISTERED PROFESSIONAL ENGINEER K. VO No. 63139 Exp. 06-30-06 CIVIL STATE OF CALIFORNIA

MARK	DATE	DESCRIPTIONS	BY	CH'D
1	12-15-03	Details Modified	EM	KV

REVISIONS

CONTRACT CHANGE ORDER NO. ____
SHEET ___ OF ___

NOTE;
THE CONTRACTOR SHALL VERIFY ALL CONTROLLING FIELD DIMENSIONS BEFORE ORDERING OR FABRICATING ANY MATERIAL.

	BY	CHECKED
DESIGN	K. Bhala	J. Zhang
DETAILS	R. Nakaoka	J. Zhang
QUANTITIES	P. Von Savoye	K. Bhala

STRUCTURES DESIGN DETAIL SHEET (ENGLISH) (REV. 1/1/99)

ORIGINAL SCALE IN INCHES FOR REDUCED PLANS 0 1 2 3

SFOBB - SEISMIC RETROFIT PROJECT NO. 12

STATE OF CALIFORNIA DEPARTMENT OF TRANSPORTATION

DIVISION OF STRUCTURES STRUCTURE DESIGN 2

CU 04
EA 0435V1

FILE => amucddcs.dgn

BRIDGE NO. 34-0126R1
POST MILE 5.07/5.67

SFOBB - SAN FRANCISCO APPROACH (REPLACE

MAINLINE

DEMOLITION DETAILS CELLULAR STRUCTURE AND APPROAC

DISREGARD PRINTS BEARING EARLIER REVISION DATES

REVISION DATES (PRELIMINARY STAGE ONLY) 5-1-00 11-30-00 12-1-00 4-23-01 7-22-01

SHEET 283 OF 41

DIST	COUNTY	ROUTE	POST MILES TOTAL PROJECT	SHEET No	TOTAL SHEETS
04	SF	80	4.9/5.9	1165	1511

REGISTERED CIVIL ENGINEER 12-03-01

6-17-02
PLANS APPROVAL DATE

REGISTERED PROFESSIONAL ENGINEER G. Setberg No. 47829 Exp. 12-31-03 CIVIL STATE OF CALIFORNIA

The State of California or its officers or agents shall not be responsible for the accuracy or completeness of electronic copies of this plan sheet.

Caltrans now has a web site! To get to the web site, go to: http://www.dot.ca.gov

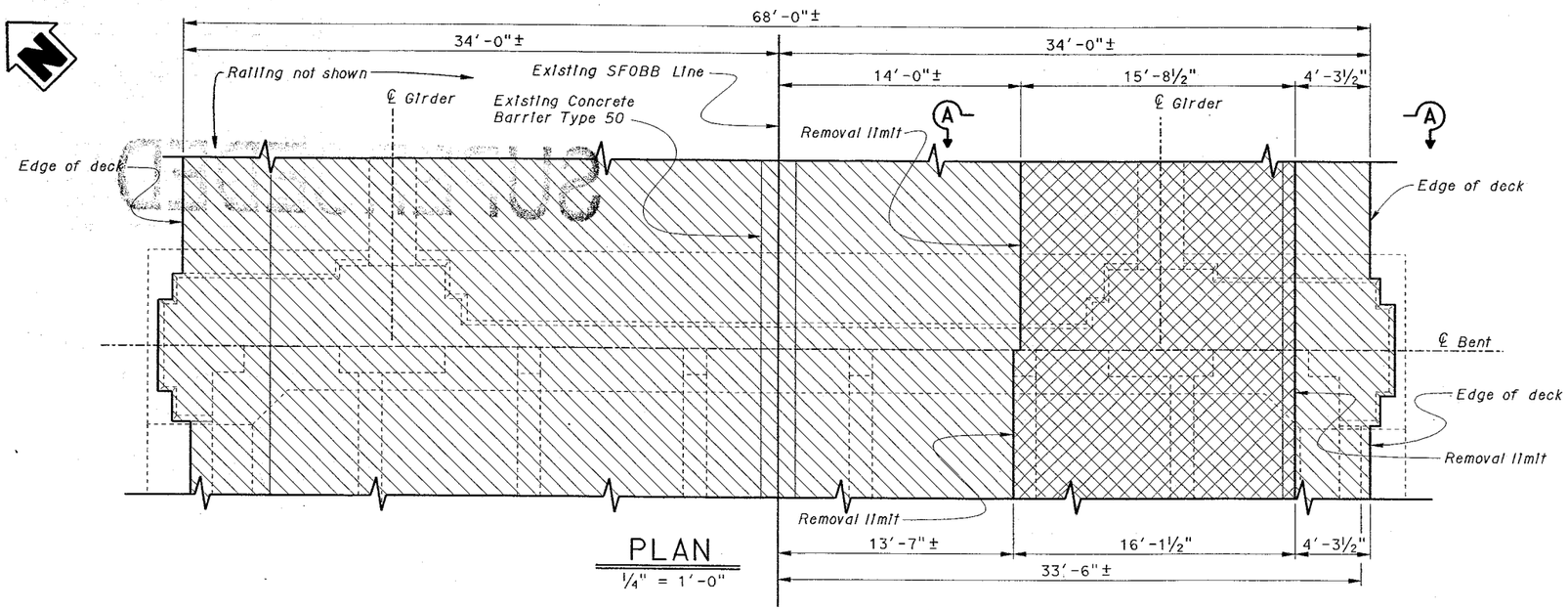

PLAN
¼" = 1'-0"

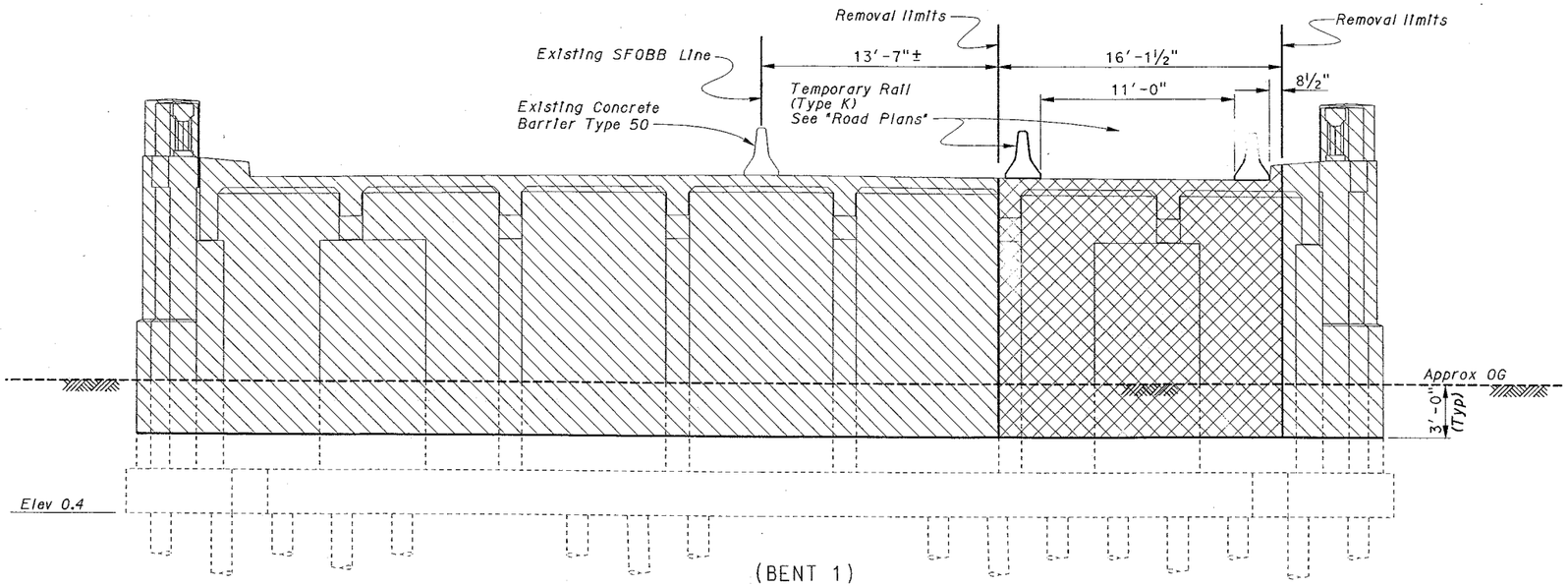

ELEVATION
¼" = 1'-0"

NOTE:
THE CONTRACTOR SHALL VERIFY ALL CONTROLLING FIELD DIMENSIONS BEFORE ORDERING OR FABRICATING ANY MATERIAL.

LEGEND

- Indicates Demolition Limits
- Indicates Limits of Stage 2 Bridge Removal
- Indicates Limits of Stage 3 Bridge Removal

Note:
1. All piles not shown.
2. For Bent location and details not shown, see "Demolition Layout Plan No. 1" sheet.

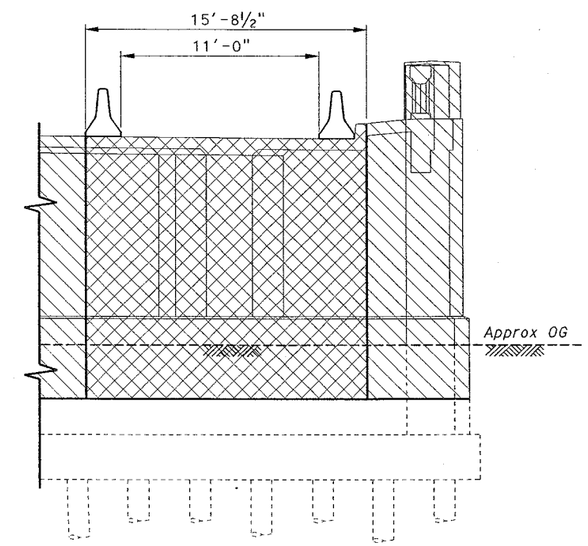

SECTION A-A
¼" = 1'-0"

DESIGN	BY K. Bhala	CHECKED J. Zhang	
DETAILS	BY FD/JK/RN/DE	CHECKED J. Zhang	
QUANTITIES	BY A. Tam	CHECKED S. Schenck	

STRUCTURES DESIGN DETAIL SHEET (ENGLISH) (REV. 1/1/99)

ORIGINAL SCALE IN INCHES FOR REDUCED PLANS 0 1 2 3

SFOBB - SEISMIC RETROFIT PROJECT NO. 12

STATE OF CALIFORNIA DEPARTMENT OF TRANSPORTATION

DIVISION OF STRUCTURES STRUCTURE DESIGN 2

CU 04
EA 0435V1

FILE => amudd01.dgn

BRIDGE NO. 34-0126RL
POST MILE 5.07/5.67

SFOBB - SAN FRANCISCO APPROACH (REPLACE)

MAINLINE

DEMOLITION DETAILS BENT NO. 1

DISREGARD PRINTS BEARING EARLIER REVISION DATES

REVISION DATES (PRELIMINARY STAGE ONLY) 7-24-00 7-28-00 7-28-00 8-10-00 11-15-00 4-24-01 7-22-01

SHEET 284 OF 419

USERNAME => tra DATE PLOTTED => 22-JUN-2002 TIME PLOTTED => 10:11

DIST	COUNTY	ROUTE	POST MILES TOTAL PROJECT	SHEET No	TOTAL SHEETS
04	SF	80	4.9/5.9	1166	1511

REGISTERED CIVIL ENGINEER 12-03-01

6-17-02
PLANS APPROVAL DATE

REGISTERED PROFESSIONAL ENGINEER G. Setberg No. 47829 Exp. 12-31-03 CIVIL STATE OF CALIFORNIA

The State of California or its officers or agents shall not be responsible for the accuracy or completeness of electronic copies of this plan sheet.

Caltrans now has a web site! To get to the web site, go to: http://www.dot.ca.gov

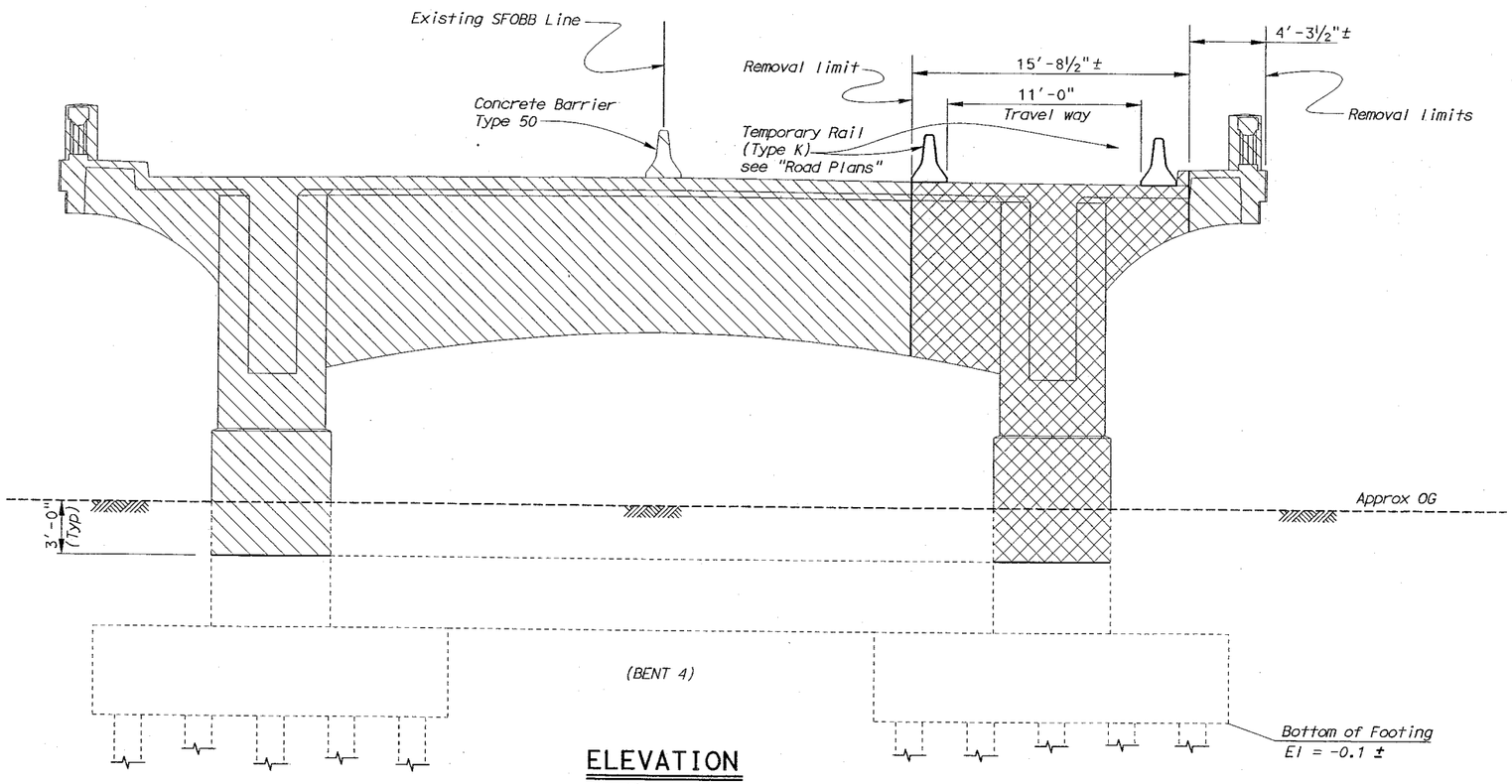

ELEVATION

¼" = 1'-0"

LEGEND

- Indicates Demolition Limits
- Indicates Limits of Stage 2 Bridge Removal
- Indicates Limits of Stage 3 Bridge Removal

Notes:

1. All piles not shown.
2. Bent 4 shown, Bents 2 & 3 similar.
3. For Bent locations and details not shown see "Demolition Layout Plan No. 1" sheet.

NOTE:
THE CONTRACTOR SHALL VERIFY ALL CONTROLLING FIELD DIMENSIONS BEFORE ORDERING OR FABRICATING ANY MATERIAL.

	BY	CHECKED
DESIGN	K. Bhala	J. Zhang
DETAILS	FD/JK/RN/DE	J. Zhang
QUANTITIES	Alan Tam	S. Schenck

SFOBB - SEISMIC RETROFIT PROJECT NO. 12

STATE OF CALIFORNIA
DEPARTMENT OF TRANSPORTATION

DIVISION OF STRUCTURES
STRUCTURE DESIGN 2

BRIDGE NO. 34-0126RL
POST MILE 5.07/5.67

SFOBB - SAN FRANCISCO APPROACH (REPLACE)

MAINLINE

DEMOLITION DETAILS BENTS NO. 2,3, AND 4

STRUCTURES DESIGN DETAIL SHEET (ENGLISH) (REV. 1/1/99)

ORIGINAL SCALE IN INCHES FOR REDUCED PLANS 0 1 2 3

CU 04
EA 0435V1

DISREGARD PRINTS BEARING EARLIER REVISION DATES

REVISION DATES (PRELIMINARY STAGE ONLY) 10-25-90 4-30-01 4-30-01

SHEET 285 OF 419

FILE => amudd02.dgn

USERNAME => trmnguye DATE PLOTTED => 22-JUN-2002 TIME PLOTTED => 10:04

DIST	COUNTY	ROUTE	POST MILES TOTAL PROJECT	SHEET No.	TOTAL SHEETS
04	SF	80	4.9/5.9	1167	1511

REGISTERED CIVIL ENGINEER 12-03-01

6-17-02
PLANS APPROVAL DATE

REGISTERED PROFESSIONAL ENGINEER G. Setberg No. 47829 Exp. 12-31-03 CIVIL STATE OF CALIFORNIA

The State of California or its officers or agents shall not be responsible for the accuracy or completeness of electronic copies of this plan sheet.

Caltrans now has a web site! To get to the web site, go to: http://www.dot.ca.gov

Notes:

1. *All piles not shown.*
2. *For Bent L-104 & R-102 concrete removal details see Bayshore Viaduct-4th Street (Retrofit) "Concrete Removal Plan No. 1 & No. 2" sheets.*
3. *For Bent location and details not shown see "Demolition Layout Plan No. 1 and No. 2" sheets.*
4. *Portion of existing bent to remain as support for 4th Street OC Interim Structure. For additional information, see Br. No. 34-0153T plans.*

LEGEND

- *Indicates Demolition Limits*
- *Indicates Limits of Stage 2 Bridge Removal*
- *Indicates Limits of Stage 3 Bridge Removal*
- *Indicates Limits of Stage 5 Bridge Removal*

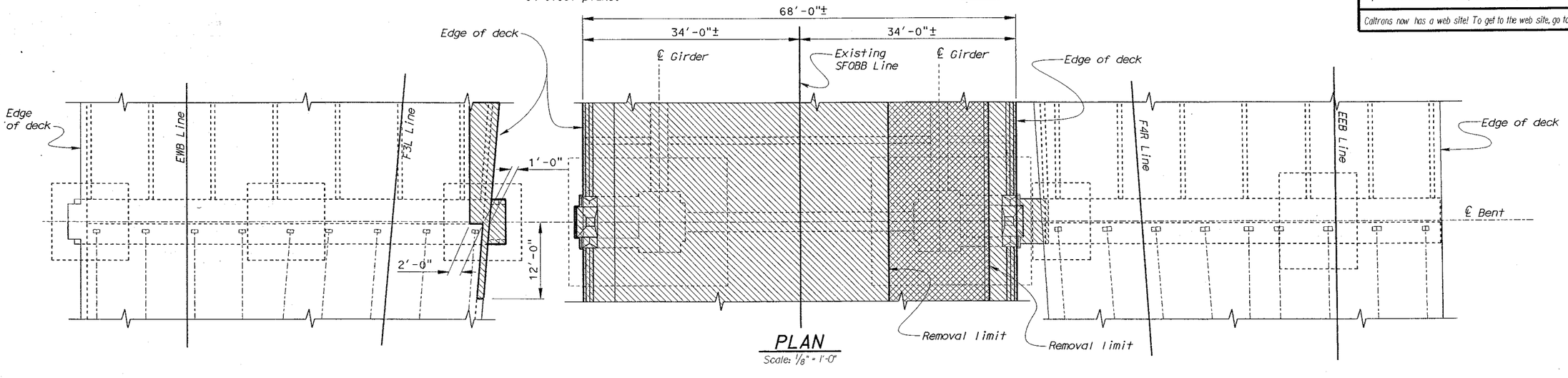

PLAN

Scale: 1/8" = 1'-0"

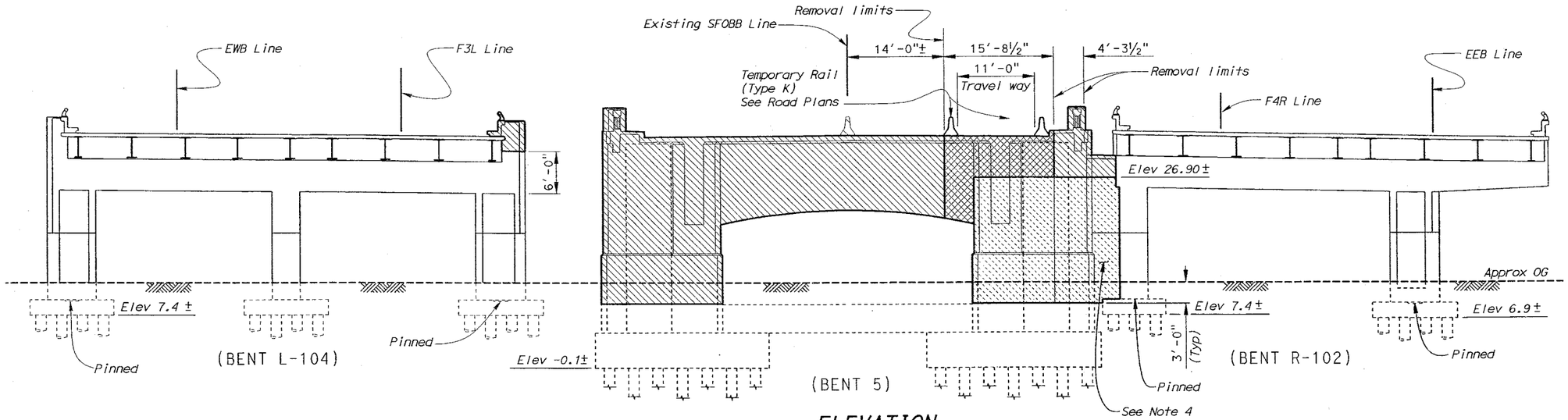

ELEVATION

Scale: 1/8" = 1'-0"

NOTE;
THE CONTRACTOR SHALL VERIFY ALL CONTROLLING FIELD DIMENSIONS BEFORE ORDERING OR FABRICATING ANY MATERIAL.

	BY	CHECKED
DESIGN	K. Bhala	J. Zhang
DETAILS	FD/JK/RN/DE	J. Zhang
QUANTITIES	P. Von Savoye	K. Bhala

SFOBB - SEISMIC RETROFIT PROJECT NO. 12

STATE OF CALIFORNIA DEPARTMENT OF TRANSPORTATION

DIVISION OF STRUCTURES STRUCTURE DESIGN 2

BRIDGE NO. 34-0126RL

POST MILE 5.07/5.67

SFOBB - SAN FRANCISCO APPROACH (REPLACE)

MAINLINE

DEMOLITION DETAILS BENT NO. 5

STRUCTURES DESIGN DETAIL SHEET (ENGLISH) (REV. 1/1/99)

ORIGINAL SCALE IN INCHES FOR REDUCED PLANS 0 1 2 3

CU 04
EA 0435V1

FILE => amudd05.dgn

DISREGARD PRINTS BEARING EARLIER REVISION DATES

REVISION DATES (PRELIMINARY STAGE ONLY) 10-26-00 11-16-00 4-24-01 7-12-01 12-03-01

SHEET 286 OF 419

USERNAME => troland DATE PLOTTED => 22-JUN-2002 TIME PLOTTED => 10:13

Notes:

1. All piles not shown.
2. For bent location and details not shown see "Demolition Layout Plan No. 2" sheet.
3. For Bent R-6 and L-6 concrete removal limits see Bayshore Viaduct-4th Street (Retrofit) "Concrete Removal Plan No. 1 and No. 2" sheets.
4. Portion of existing bent to remain as support for 4th Street OC Interim Structure. For additional information, see Br. No. 34-0153T plans.

LEGEND

- Indicates Demolition Limits
- Indicates Limits of Stage 1 Bridge Removal
- Indicates Limits of Stage 2 Bridge Removal
- Indicates Limits of Stage 3 Bridge Removal
- Indicates Limits of Stage 5 Bridge Removal

DIST	COUNTY	ROUTE	POST MILES TOTAL PROJECT	SHEET No	TOTAL SHEETS
04	SF	80	4.9/5.9	1168	1511

REGISTERED CIVIL ENGINEER 12-03-01

6-17-02
PLANS APPROVAL DATE

REGISTERED PROFESSIONAL ENGINEER G. Setberg No. 47829 Exp. 12-31-03 CIVIL STATE OF CALIFORNIA

The State of California or its officers or agents shall not be responsible for the accuracy or completeness of electronic copies of this plan sheet.

Caltrans now has a web site! To get to the web site, go to: http://www.dot.ca.gov

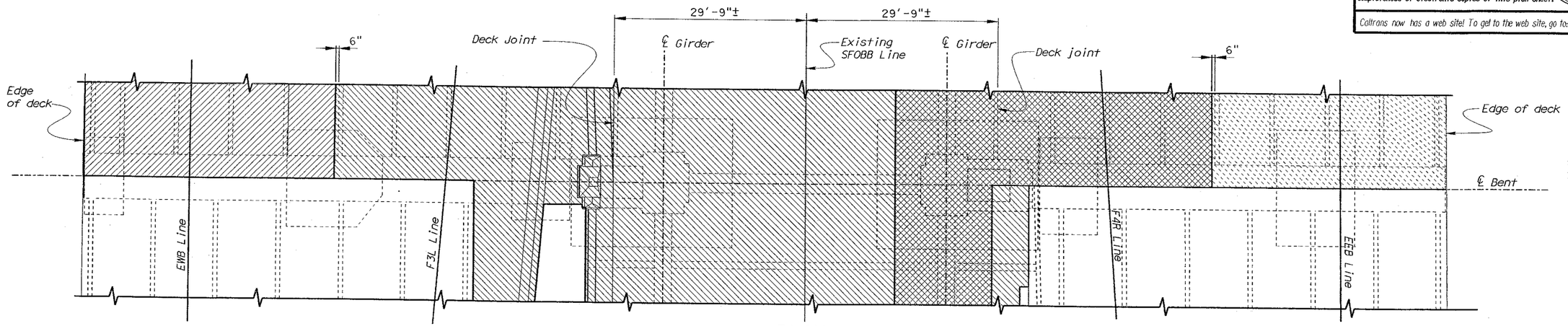

PLAN

Scale: 1/8" = 1'-0"

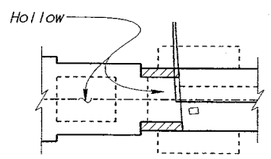

SECTION A-A

Scale: 1/8" = 1'-0"

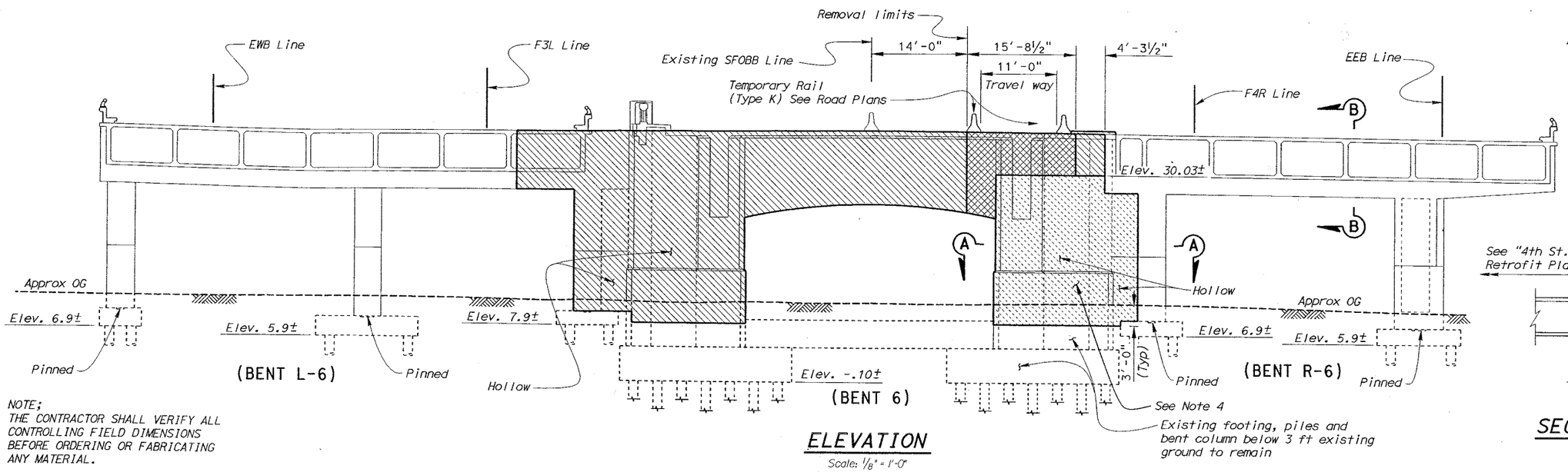

ELEVATION

Scale: 1/8" = 1'-0"

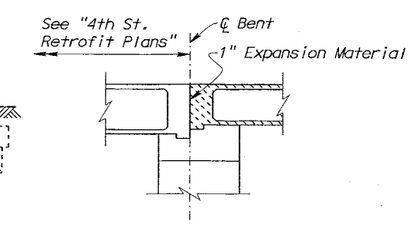

SECTION B-B

Scale: 1/8" = 1'-0"

NOTE;
THE CONTRACTOR SHALL VERIFY ALL CONTROLLING FIELD DIMENSIONS BEFORE ORDERING OR FABRICATING ANY MATERIAL.

	BY	CHECKED
DESIGN	K. Bhala	J. Zhang
DETAILS	FD/JK/RN/DE	J. Zhang
QUANTITIES	P. Von Savoye	K. Bhala

STRUCTURES DESIGN DETAIL SHEET (ENGLISH) (REV. 1/1/99)

ORIGINAL SCALE IN INCHES FOR REDUCED PLANS 0 1 2 3

STATE OF CALIFORNIA DEPARTMENT OF TRANSPORTATION

DIVISION OF STRUCTURES STRUCTURE DESIGN 2

CU 04
EA 0435V1

FILE => amudd06.dgn

SFOBB - SEISMIC RETROFIT PROJECT NO. 12

SFOBB - SAN FRANCISCO APPROACH (REPLACE)

BRIDGE NO. 34-0126RL

POST MILE 5.07/5.67

MAINLINE

DEMOLITION DETAILS BENT NO. 6

DISREGARD PRINTS BEARING EARLIER REVISION DATES

REVISION DATES (PRELIMINARY STAGE ONLY) 10-26-00 11-16-00 4-24-01 7-22-01 12-03-01

SHEET 287 OF 419

USERNAME => tfrol.ondt DATE PLOTTED => 22-JUN-2002 TIME PLOTTED => 10:05

Caltrans now has a web site! To get to the web site, go to: http://www.dot.ca.gov

DIST	COUNTY	ROUTE	POST MILES TOTAL PROJECT	SHEET No.	TOTAL SHEETS
04	SF	80	4.9/5.9	1169	1511

REGISTERED CIVIL ENGINEER 12-03-01

6-17-02
PLANS APPROVAL DATE

REGISTERED PROFESSIONAL ENGINEER G. Setberg No. 47829 Exp. 12-31-03 CIVIL STATE OF CALIFORNIA

The State of California or its officers or agents shall not be responsible for the accuracy or completeness of electronic copies of this plan sheet.

Notes:

1. All piles not shown.
2. For temporary support column detaits, see "Bent L7 Column Support Details", "Bent L8 Column Support Details", "Bent L7 and L8 Column Pile Details", "Bent R7 Column Support Details", and "Bent R8 Column Support Details" sheets
3. For Bent location and details not shown see "Demolition Layout Plan No. 2" sheet.

LEGEND

- Indicates Demolition Limits
- Indicates Limits of Stage 1 Bridge Removal
- Indicates Limits of Stage 2 Bridge Removal
- Indicates Limits of Stage 3 Bridge Removal
- Indicates Limits of Stage 5 Bridge Removal

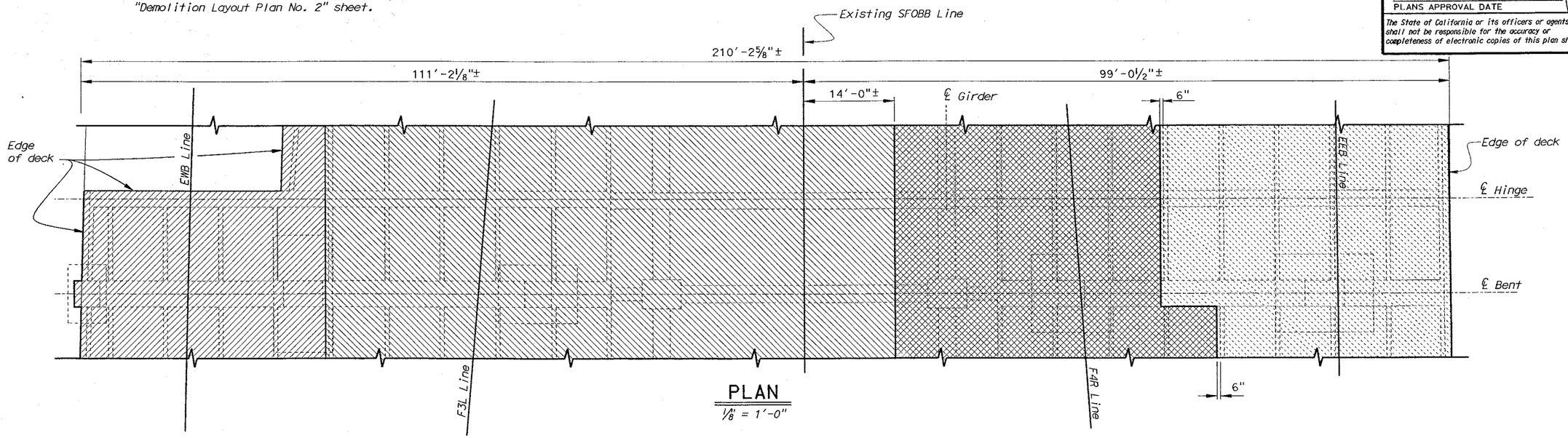

PLAN
⅛" = 1'-0"

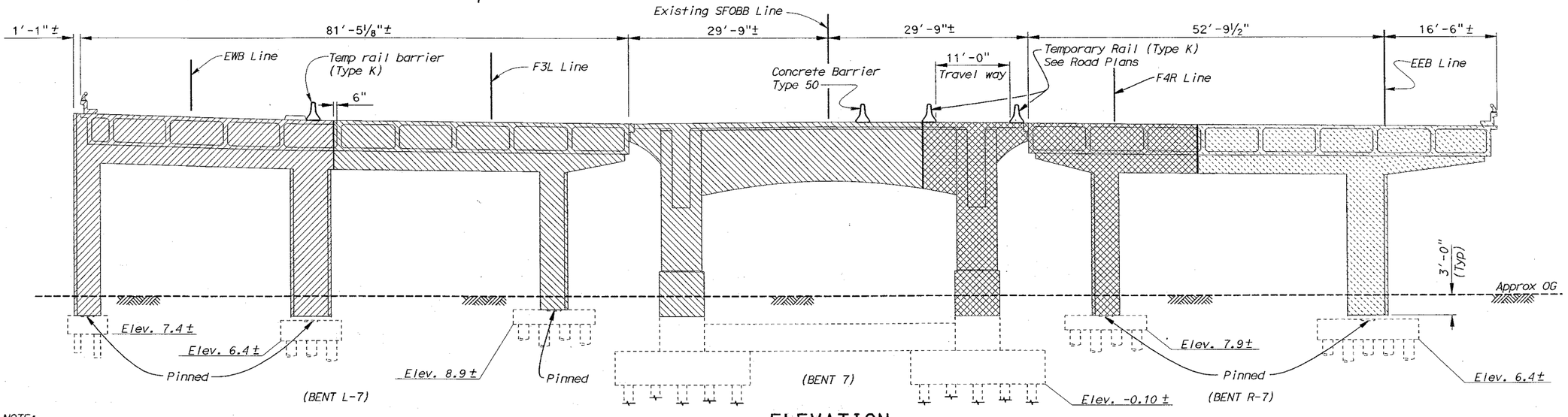

ELEVATION
⅛" = 1'-0"

NOTE;
THE CONTRACTOR SHALL VERIFY ALL CONTROLLING FIELD DIMENSIONS BEFORE ORDERING OR FABRICATING ANY MATERIAL.

	BY	CHECKED
DESIGN	K. Bhala	J. Zhang
DETAILS	FD/JK/DE	J. Zhang
QUANTITIES	P. Van Sevoye	K. Bhala

SFOBB - SEISMIC RETROFIT PROJECT NO. 12

SFOBB - SAN FRANCISCO APPROACH (REPLACE)

STATE OF CALIFORNIA DEPARTMENT OF TRANSPORTATION

DIVISION OF STRUCTURES STRUCTURE DESIGN 2

BRIDGE NO. 34-0126RL

POST MILE 5.07/5.67

MAINLINE

DEMOLITION DETAILS BENT NO. 7

STRUCTURES DESIGN DETAIL SHEET (ENGLISH) (REV. 1/1/99)

ORIGINAL SCALE IN INCHES FOR REDUCED PLANS 0 1 2 3

CU 04
EA 0435V1

FILE => amudd07.dgn

DISREGARD PRINTS BEARING EARLIER REVISION DATES

REVISION DATES (PRELIMINARY STAGE ONLY) 11-06-00 11-13-00 4-24-01 7-22-01

SHEET 288 OF 419

USERNAME => troiandt DATE PLOTTED => 22-JUN-2002 TIME PLOTTED => 10:10

DIST	COUNTY	ROUTE	POST MILES TOTAL PROJECT	SHEET No.	TOTAL SHEETS
04	SF	80	4.9/5.9	1170	1511

REGISTERED CIVIL ENGINEER 12-03-01

6-17-02
PLANS APPROVAL DATE

REGISTERED PROFESSIONAL ENGINEER G. Setberg No. 47829 Exp. 12-31-03 CIVIL STATE OF CALIFORNIA

The State of California or its officers or agents shall not be responsible for the accuracy or completeness of electronic copies of this plan sheet.

Caltrans now has a web site! To get to the web site, go to: http://www.dot.ca.gov

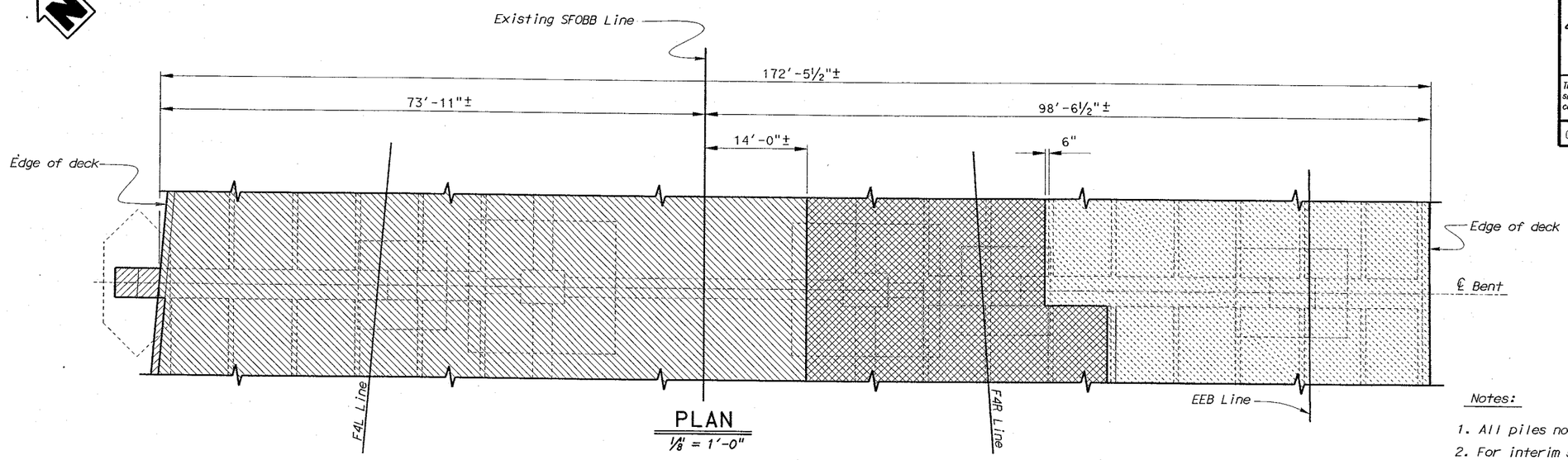

PLAN
1/8" = 1'-0"

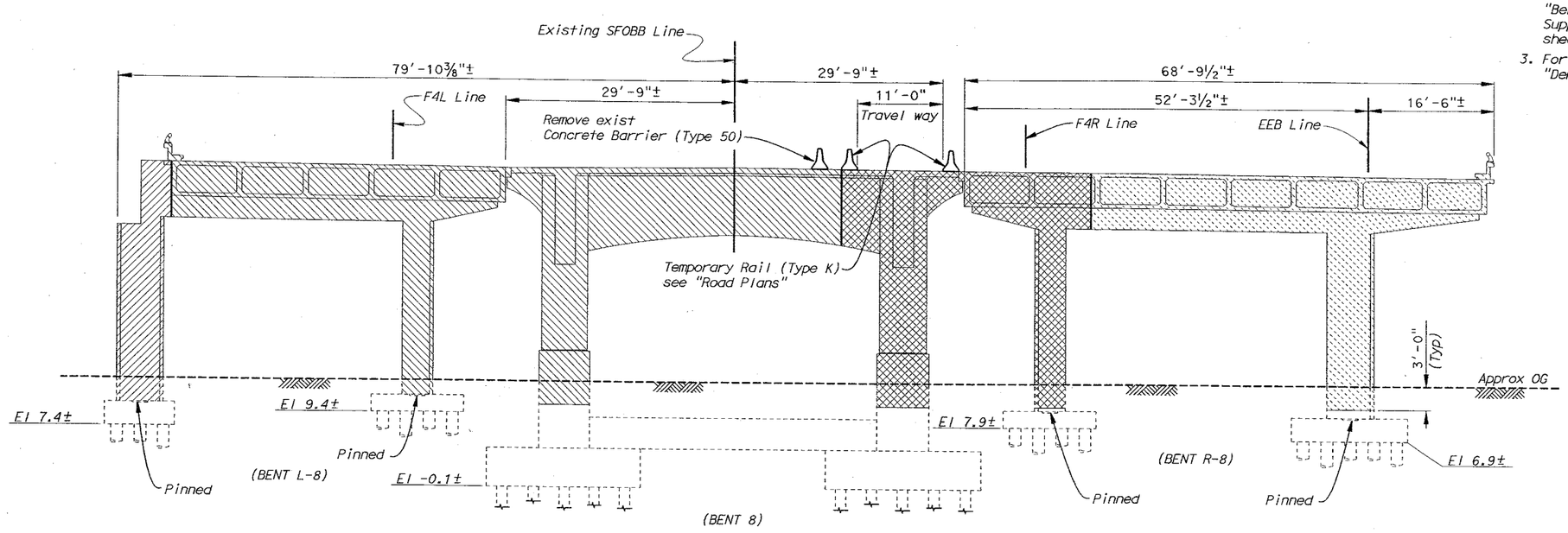

ELEVATION
1/8" = 1'-0"

LEGEND

- Indicates Demolition Limits
- Indicates Limits of Stage 1 Bridge Removal
- Indicates Limits of Stage 2 Bridge Removal
- Indicates Limits of Stage 3 Bridge Removal
- Indicates Limits of Stage 5 Bridge Removal

Notes:

1. All piles not shown.
2. For interim support column details, see "Bent L7 Column Support Details", "Bent L8 Column Support Details", "Bent L7 and L8 Column Pile Details", "Bent R7 Column Support Details", and "Bent R8 Column Support Details" sheets.
3. For Bent location and details not shown see "Demolition Layout Plan No. 2" sheet.

NOTE;
THE CONTRACTOR SHALL VERIFY ALL CONTROLLING FIELD DIMENSIONS BEFORE ORDERING OR FABRICATING ANY MATERIAL.

	BY	CHECKED
DESIGN	K. Bhala	J. Zhang
DETAILS	FD/JK/RN/DE	J. Zhang
QUANTITIES	P. Von Savoye	K. Bhala

STRUCTURES DESIGN DETAIL SHEET (ENGLISH) (REV. 1/1/99)

ORIGINAL SCALE IN INCHES FOR REDUCED PLANS 0 1 2 3

SFOBB - SEISMIC RETROFIT PROJECT NO. 12

STATE OF CALIFORNIA DEPARTMENT OF TRANSPORTATION

DIVISION OF STRUCTURES STRUCTURE DESIGN 2

CU 04
EA 0435V1

FILE => amudd08.dgn

BRIDGE NO. 34-0126RL
POST MILE 5.07/5.67

SFOBB - SAN FRANCISCO APPROACH (REPLACE)

MAINLINE

DEMOLITION DETAILS BENT NO. 8

DISREGARD PRINTS BEARING EARLIER REVISION DATES

REVISION DATES (PRELIMINARY STAGE ONLY) 11-3-00 11-16-00 4-23-01

SHEET 289 OF 419

USERNAME => rfotondt DATE PLOTTED => 22-JUN-2002 TIME PLOTTED => 10:12

DIST	COUNTY	ROUTE	POST MILES TOTAL PROJECT	SHEET No	TOTAL SHEETS
04	SF	80	4.9/5.9	1171	1511

REGISTERED CIVIL ENGINEER 12-03-01

6-17-02
PLANS APPROVAL DATE

REGISTERED PROFESSIONAL ENGINEER G. Setberg No. 47829 Exp. 12-31-03 CIVIL STATE OF CALIFORNIA

The State of California or its officers or agents shall not be responsible for the accuracy or completeness of electronic copies of this plan sheet.

Caltrans now has a web site! To get to the web site, go to: http://www.dot.ca.gov

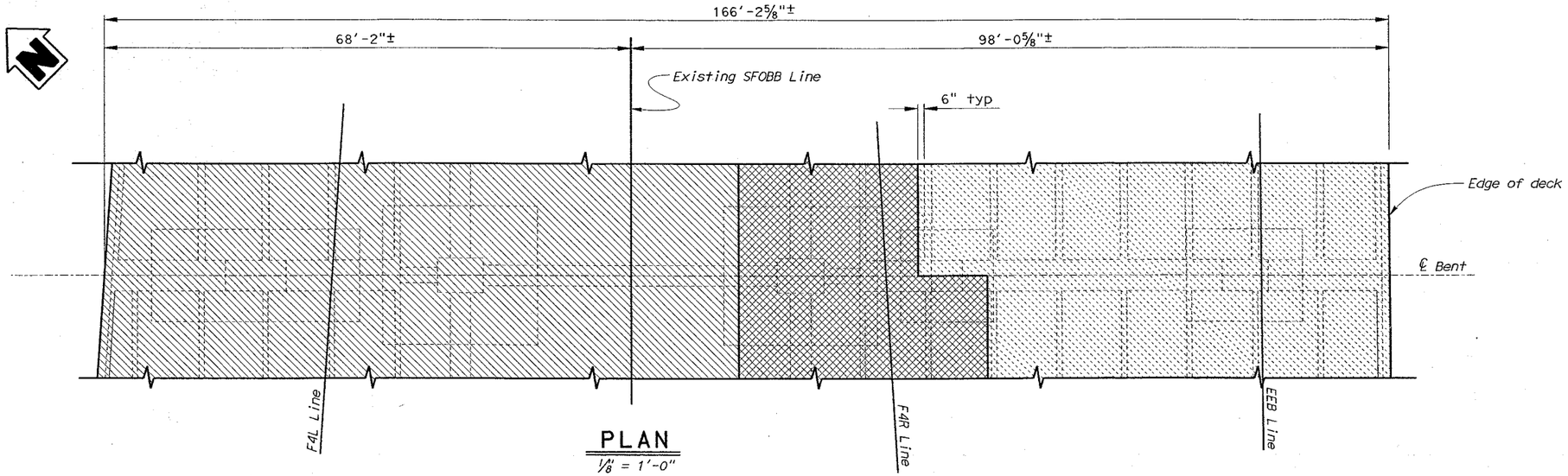

PLAN

⅛" = 1'-0"

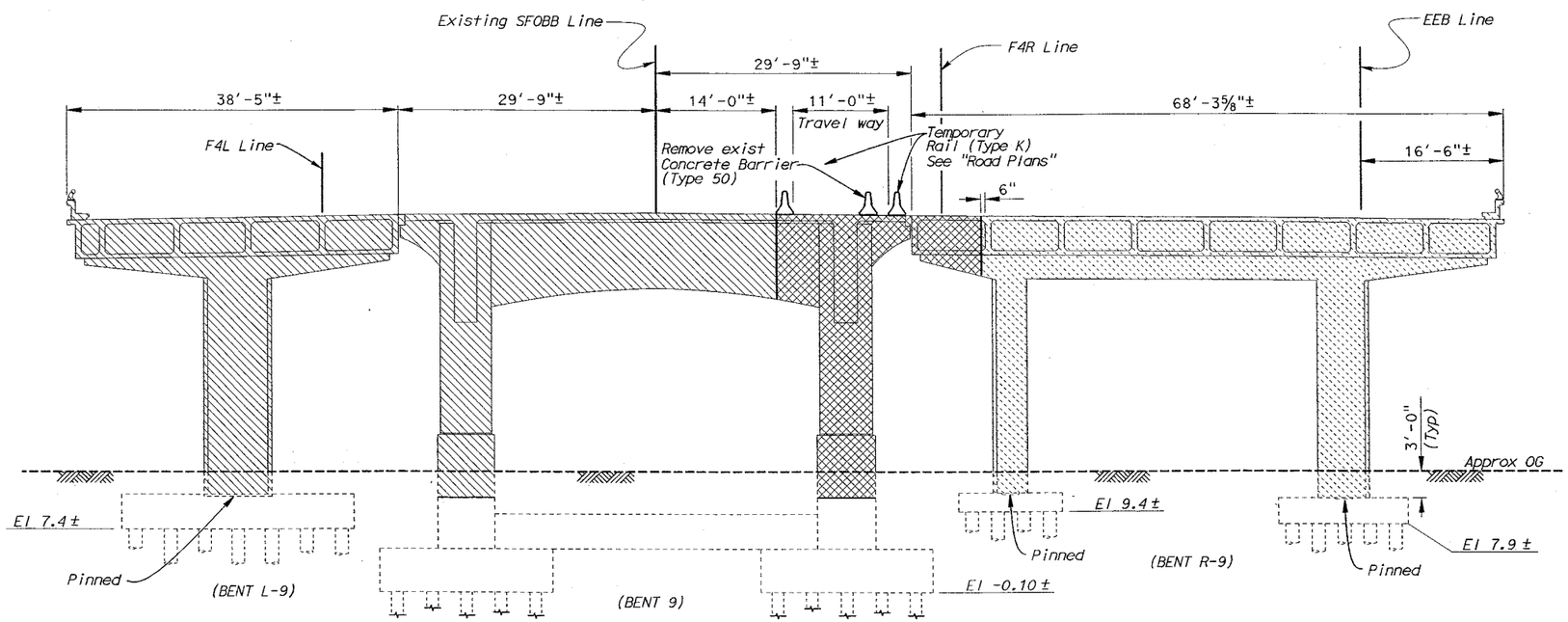

ELEVATION

⅛" = 1'-0"

LEGEND

———	*Indicates Demolition Limits*
	Indicates Limits of Stage 2 Bridge Removal
	Indicates Limits of Stage 3 Bridge Removal
	Indicates Limits of Stage 5 Bridge Removal

Notes:

1. *All piles not shown.*
2. *For Bent location and details not shown see "Demolition Layout Plan No. 2" sheet.*

NOTE;
THE CONTRACTOR SHALL VERIFY ALL CONTROLLING FIELD DIMENSIONS BEFORE ORDERING OR FABRICATING ANY MATERIAL.

	BY	CHECKED
DESIGN	K. Bhala	J. Zhang
DETAILS	FD/JK/RN/DE	J. Zhang
QUANTITIES	P. Von Savoye	K. Bhala

SFOBB - SEISMIC RETROFIT PROJECT NO. 12

STATE OF CALIFORNIA DEPARTMENT OF TRANSPORTATION

DIVISION OF STRUCTURES STRUCTURE DESIGN 2

BRIDGE NO. 34-0126RL
POST MILE 5.07/5.67

SFOBB - SAN FRANCISCO APPROACH (REPLACE)

MAINLINE

DEMOLITION DETAILS BENT NO. 9

STRUCTURES DESIGN DETAIL SHEET (ENGLISH) (REV. 1/1/99)

ORIGINAL SCALE IN INCHES FOR REDUCED PLANS 0 1 2 3

CU 04
EA 0435V1

FILE => amudd09.dgn

DISREGARD PRINTS BEARING EARLIER REVISION DATES

REVISION DATES (PRELIMINARY STAGE ONLY) 11-7-00 4-27-01 1-22-01

SHEET 290 OF 419

USERNAME => trolandt DATE PLOTTED => 22-JUN-2002 TIME PLOTTED => 10:04

DIST	COUNTY	ROUTE	POST MILES TOTAL PROJECT	SHEET No	TOTAL SHEETS
04	SF	80	4.9/5.9	1172	1511

REGISTERED CIVIL ENGINEER 12-03-01

6-17-02
PLANS APPROVAL DATE

REGISTERED PROFESSIONAL ENGINEER G. Setberg No. 47829 Exp. 12-31-03 CIVIL STATE OF CALIFORNIA

The State of California or its officers or agents shall not be responsible for the accuracy or completeness of electronic copies of this plan sheet.

Caltrans now has a web site! To get to the web site, go to: http://www.dot.ca.gov

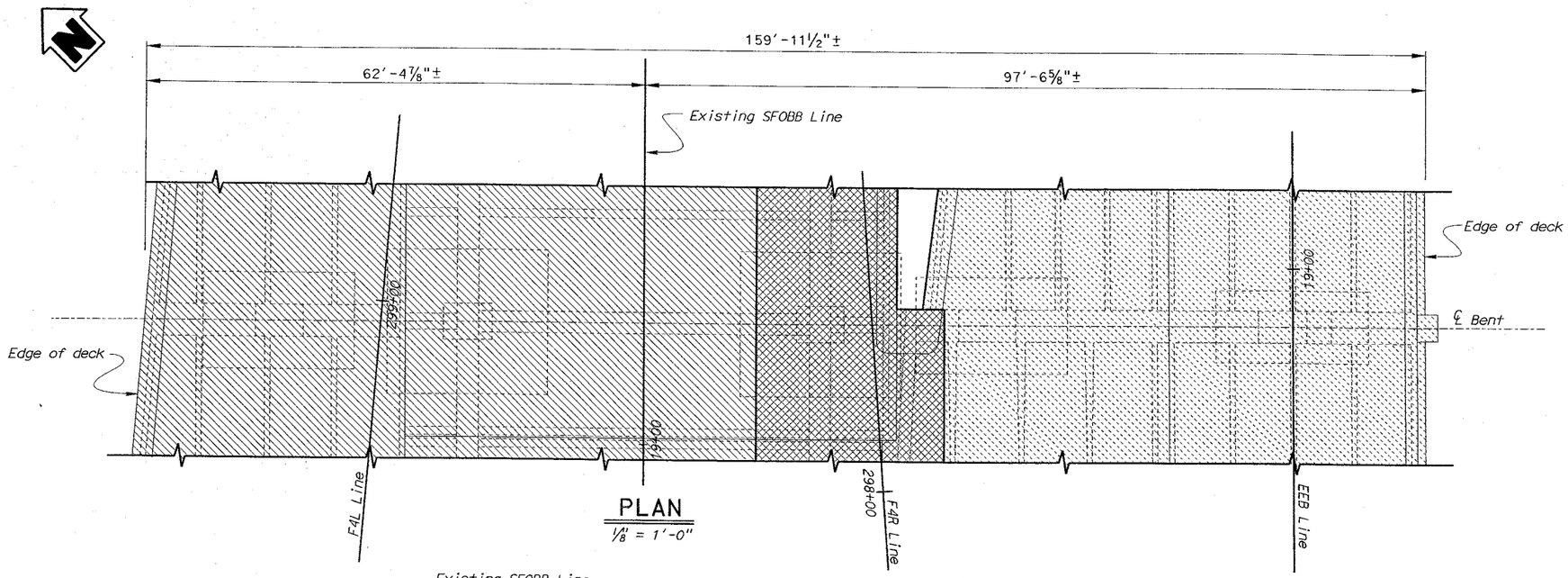

PLAN
⅛" = 1'-0"

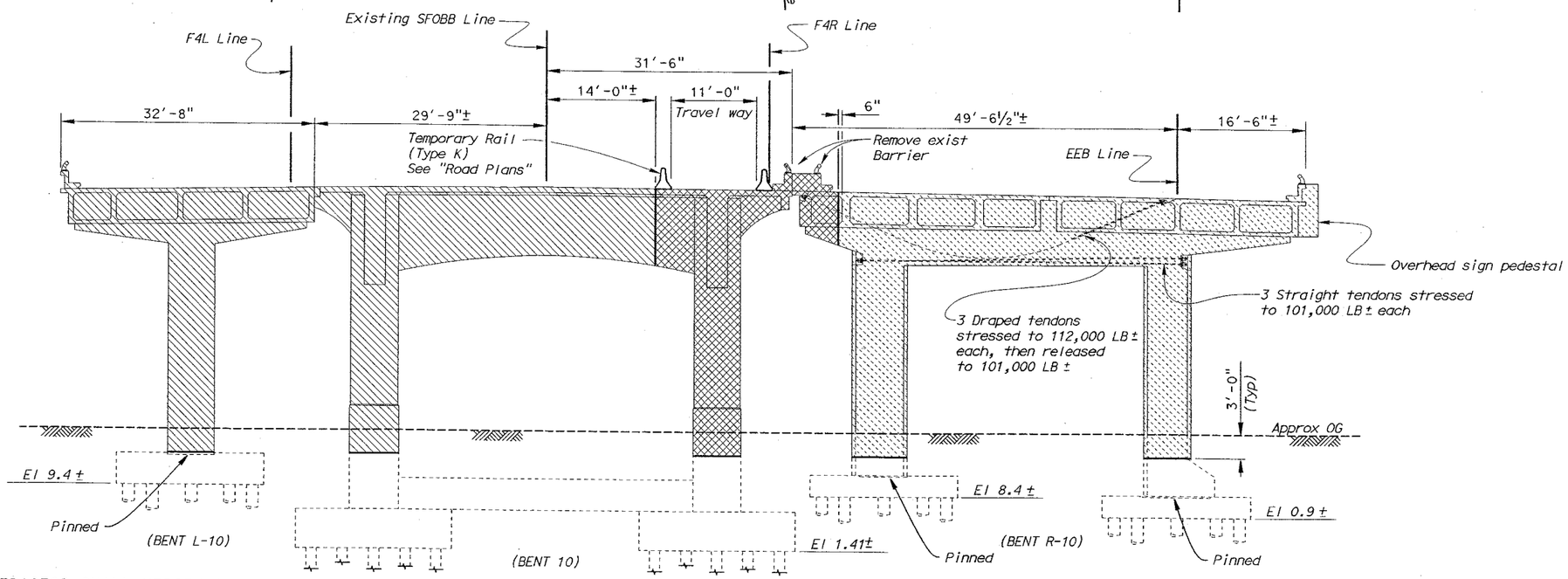

ELEVATION
⅛" = 1'-0"

NOTE;
THE CONTRACTOR SHALL VERIFY ALL CONTROLLING FIELD DIMENSIONS BEFORE ORDERING OR FABRICATING ANY MATERIAL.

LEGEND

- Indicates Demolition Limits
- Indicates Limits of Stage 2 Bridge Removal
- Indicates Limits of Stage 3 Bridge Removal
- Indicates Limits of Stage 5 Bridge Removal

Notes:

1. All piles not shown.
2. For Bent location and details not shown see "Demolition Layout Plan No. 2" sheet.

SFOBB - SEISMIC RETROFIT PROJECT NO. 12

SFOBB - SAN FRANCISCO APPROACH (REPLACE)

MAINLINE

DEMOLITION DETAILS BENT NO. 10

	BY	CHECKED
DESIGN	K. Bhala	J. Zhang
DETAILS	FD/JK/RN/DE	J. Zhang
QUANTITIES	P. Von Savoye	K. Bhala

STATE OF CALIFORNIA DEPARTMENT OF TRANSPORTATION

DIVISION OF STRUCTURES STRUCTURE DESIGN 2

BRIDGE NO. 34-0126RL

POST MILE 5.07/5.67

CU 04
EA 0435V1

DISREGARD PRINTS BEARING EARLIER REVISION DATES

REVISION DATES (PRELIMINARY STAGE ONLY) 11-6-00 11-15-00 4-30-01 7-22-01

SHEET 291 OF 419

STRUCTURES DESIGN DETAIL SHEET (ENGLISH) (REV. 1/1/99)

ORIGINAL SCALE IN INCHES FOR REDUCED PLANS 0 1 2 3

FILE => omudd10.dgn

USERNAME => trpierce DATE PLOTTED => 22-JUN-2002 TIME PLOTTED => 12:07

DIST	COUNTY	ROUTE	POST MILES TOTAL PROJECT	SHEET No	TOTAL SHEETS
04	SF	80	4.9/5.9	1173	1511

REGISTERED CIVIL ENGINEER 12-03-01

6-17-02
PLANS APPROVAL DATE

REGISTERED PROFESSIONAL ENGINEER G. Setberg No. 47829 Exp. 12-31-03 CIVIL STATE OF CALIFORNIA

The State of California or its officers or agents shall not be responsible for the accuracy or completeness of electronic copies of this plan sheet.

Caltrans now has a web site! To get to the web site, go to: http://www.dot.ca.gov

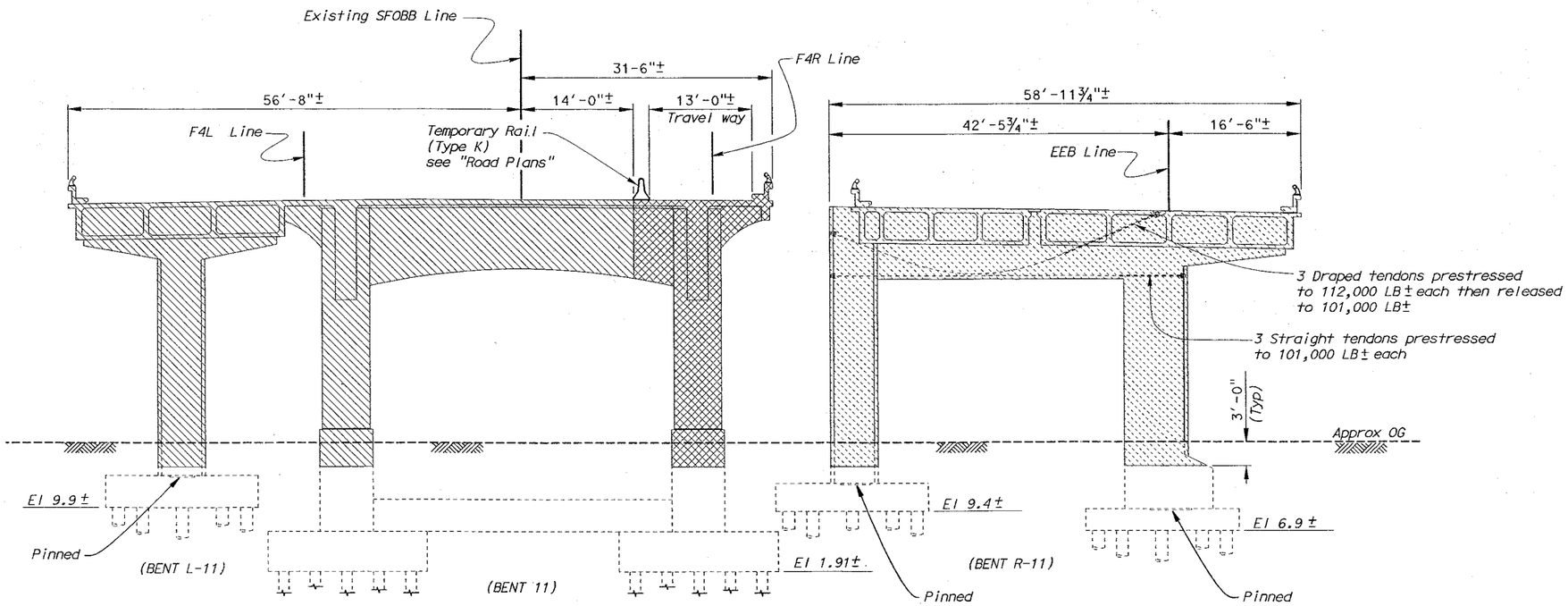

ELEVATION

1/8" = 1'-0"

LEGEND

- Indicates Demolation Limits
- Indicates Limits of Stage 1 Bridge Removal
- Indicates Limits of Stage 3 Bridge Removal
- Indicates Limits of Stage 5 Bridge Removal

Notes:

1. All piles not shown.
2. Bent 11 shown, Bent 12 similar
3. For Bent locations and details not shown see "Demolition Layout Plan No. 2" sheet.

NOTE;
THE CONTRACTOR SHALL VERIFY ALL CONTROLLING FIELD DIMENSIONS BEFORE ORDERING OR FABRICATING ANY MATERIAL.

SFOBB - SEISMIC RETROFIT PROJECT NO. 12

SFOBB - SAN FRANCISCO APPROACH (REPLACE

MAINLINE

DEMOLITION DETAILS BENTS NO.11 AND 12

	BY	CHECKED
DESIGN	K. Bhala	J. Zhang
DETAILS	FD/JK/RN/DE	J. Zhang
QUANTITIES	P. Von Savoye	K. Bhala

STATE OF CALIFORNIA DEPARTMENT OF TRANSPORTATION

DIVISION OF STRUCTURES STRUCTURE DESIGN 2

BRIDGE NO. 34-0126RL

POST MILE 5.07/5.67

CU 04
EA 0435V1

DISREGARD PRINTS BEARING EARLIER REVISION DATES

REVISION DATES (PRELIMINARY STAGE ONLY) 11-3-00 11-29-00 4-30-01

SHEET 292 OF 419

STRUCTURES DESIGN DETAIL SHEET (ENGLISH) (REV. 1/1/99)

ORIGINAL SCALE IN INCHES FOR REDUCED PLANS 0 1 2 3

FILE =>,amudd11.dgn

USERNAME => ttt DATE PLOTTED => 22-JUN-2002 TIME PLOTTED => 12:08

DIST	COUNTY	ROUTE	POST MILES TOTAL PROJECT	SHEET No	TOTAL SHEETS
04	SF	80	4.9/5.9	1174	1511

REGISTERED CIVIL ENGINEER 12-03-01

6-17-02
PLANS APPROVAL DATE

REGISTERED PROFESSIONAL ENGINEER G. Setberg No. 47829 Exp. 12-31-03 CIVIL STATE OF CALIFORNIA

The State of California or its officers or agents shall not be responsible for the accuracy or completeness of electronic copies of this plan sheet.

Caltrans now has a web site! To get to the web site, go to: http://www.dot.ca.gov

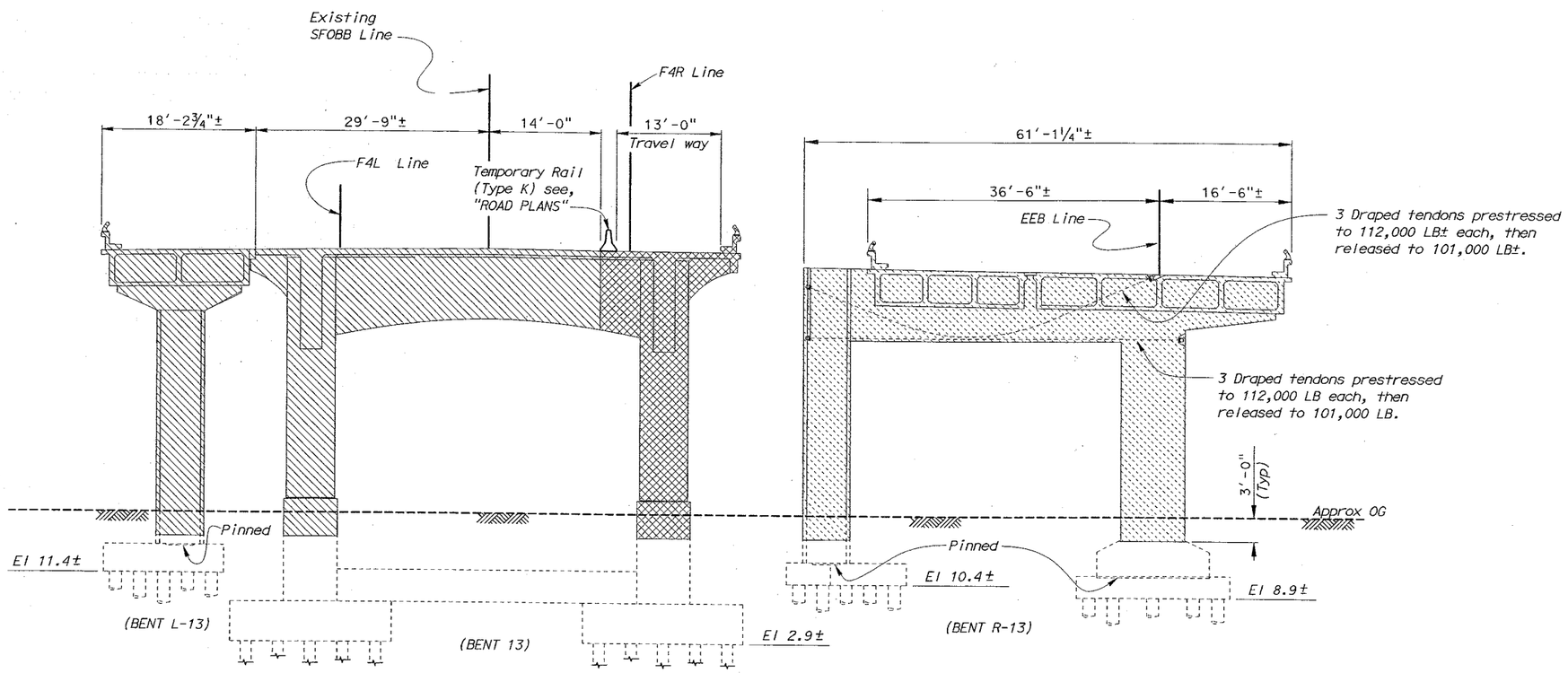

ELEVATION

1/8" = 1'-0"

LEGEND

- Indicates Demolation Limits
- Indicates Limits of Stage 2 Bridge Removal
- Indicates Limits of Stage 3 Bridge Removal
- Indicates Limits of Stage 5 Bridge Removal

Notes:

1. All piles not shown. Bent 15 not on piles.
2. Bent 13 shown, Bents 14, & 15 similar.
3. For bent locations and details not shown, see "Demolition Layout Plan No. 2 and No. 3" sheets.

NOTE;
THE CONTRACTOR SHALL VERIFY ALL CONTROLLING FIELD DIMENSIONS BEFORE ORDERING OR FABRICATING ANY MATERIAL.

	BY	CHECKED
DESIGN	K. Bhala	J. Zhang
DETAILS	FD/JK/RN/DE	J. Zhang
QUANTITIES	D. Abellon	K. Bhala

STRUCTURES DESIGN DETAIL SHEET (ENGLISH) (REV. 1/1/99)

ORIGINAL SCALE IN INCHES FOR REDUCED PLANS 0 1 2 3

SFOBB - SEISMIC RETROFIT PROJECT NO. 12

STATE OF CALIFORNIA DEPARTMENT OF TRANSPORTATION

DIVISION OF STRUCTURES STRUCTURE DESIGN 2

CU 04
EA 0435V1

BRIDGE NO. 34-0126RL
POST MILE 5.07/5.67

SFOBB - SAN FRANCISCO APPROACH (REPLACE)

MAINLINE

DEMOLITION DETAILS BENTS NO.13,14 AND 15

DISREGARD PRINTS BEARING EARLIER REVISION DATES → REVISION DATES (PRELIMINARY STAGE ONLY) 11-7-00 11-13-00 5-9-01

SHEET 293 OF 419

FILE => amudd13.dgn

USERNAME => tripierce DATE PLOTTED => 22-JUN-2002 TIME PLOTTED => 12:08

DIST	COUNTY	ROUTE	POST MILES TOTAL PROJECT	SHEET No	TOTAL SHEETS
04	SF	80	4.9/5.9	1175	1511

REGISTERED CIVIL ENGINEER 12-03-01

6-17-02
PLANS APPROVAL DATE

REGISTERED PROFESSIONAL ENGINEER G. Setberg No. 47829 Exp. 12-31-03 CIVIL STATE OF CALIFORNIA

The State of California or its officers or agents shall not be responsible for the accuracy or completeness of electronic copies of this plan sheet.

Caltrans now has a web site! To get to the web site, go to: http://www.dot.ca.gov

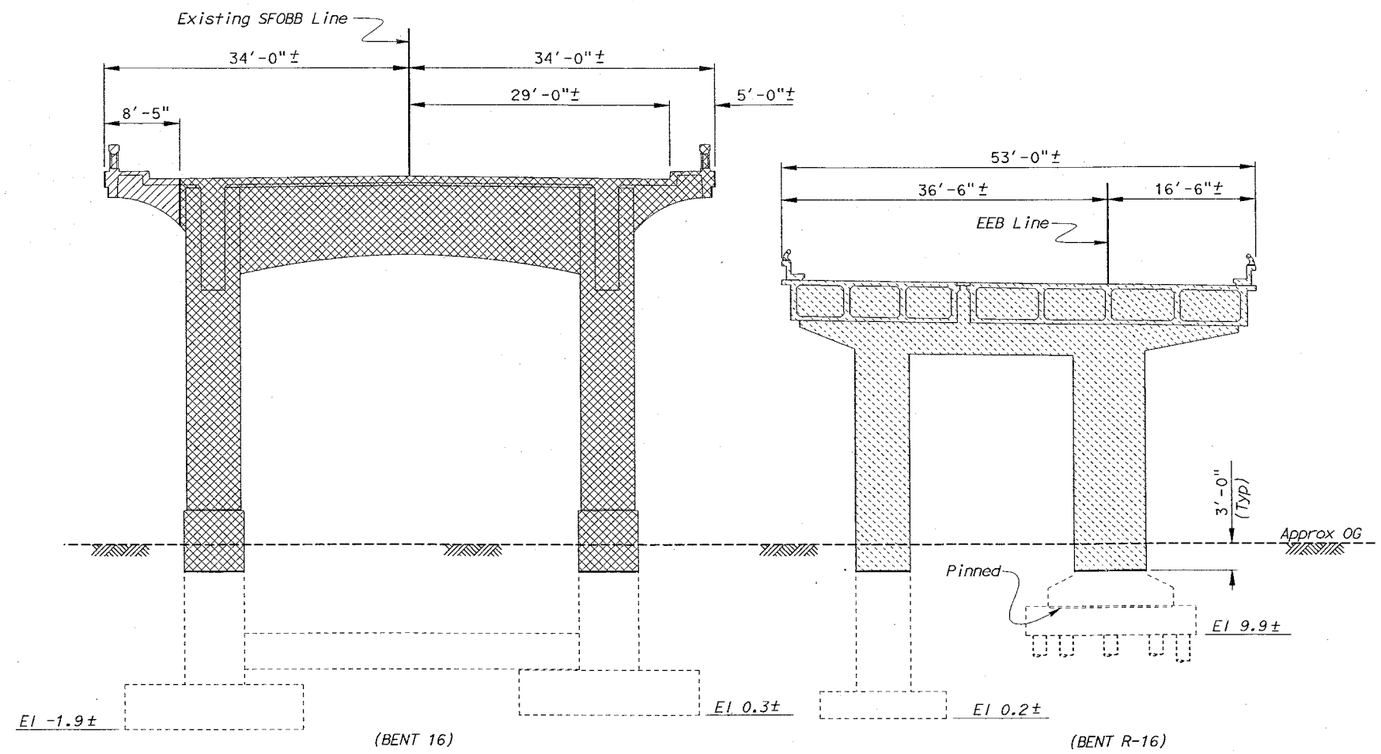

ELEVATION

1/8" = 1'-0"

LEGEND

- Indicates Demolation Limits
- Indicates Limits of Stage 1 Bridge Removal
- Indicates Limits of Stage 3 Bridge Removal
- Indicates Limits of Stage 5 Bridge Removal

Notes:

1. All piles not shown.
2. Bent 16 shown, Bent 17 similar.
3. For bent locations and details not shown, see "Demolition Layout Plan No. 3" sheet.

	BY	CHECKED
DESIGN	K. Bhala	J. Zhang
DETAILS	FD/JK/RN/DE	J. Zhang
QUANTITIES	M. Herron	K. Bhala

STRUCTURES DESIGN DETAIL SHEET (ENGLISH) (REV. 1/1/99)

ORIGINAL SCALE IN INCHES FOR REDUCED PLANS 0 1 2 3

SFOBB - SEISMIC RETROFIT PROJECT NO. 12

STATE OF CALIFORNIA DEPARTMENT OF TRANSPORTATION

DIVISION OF STRUCTURES STRUCTURE DESIGN 2

CU 04
EA 0435V1

BRIDGE NO. 34-0126RL
POST MILE 5.07/5.67

SFOBB - SAN FRANCISCO APPROACH (REPLACE)

MAINLINE

DEMOLITION DETAILS BENTS NO.16 AND 17

DISREGARD PRINTS BEARING EARLIER REVISION DATES

REVISION DATES (PRELIMINARY STAGE ONLY) 11-8-00 11-16-00 5-18-01 7-19-01

SHEET 294 OF 419

FILE => amudd16.dgn

USERNAME => TIME PLOTTED => 12:08 DATE PLOTTED => 22-JUN-2002

DIST	COUNTY	ROUTE	POST MILES TOTAL PROJECT	SHEET No	TOTAL SHEETS
04	SF	80	4.9/5.9	1176	1511

REGISTERED CIVIL ENGINEER 12-03-01

6-17-02
PLANS APPROVAL DATE

REGISTERED PROFESSIONAL ENGINEER G. Setberg No. 47829 Exp. 12-31-03 CIVIL STATE OF CALIFORNIA

The State of California or its officers or agents shall not be responsible for the accuracy or completeness of electronic copies of this plan sheet.

Caltrans now has a web site! To get to the web site, go to: http://www.dot.ca.gov

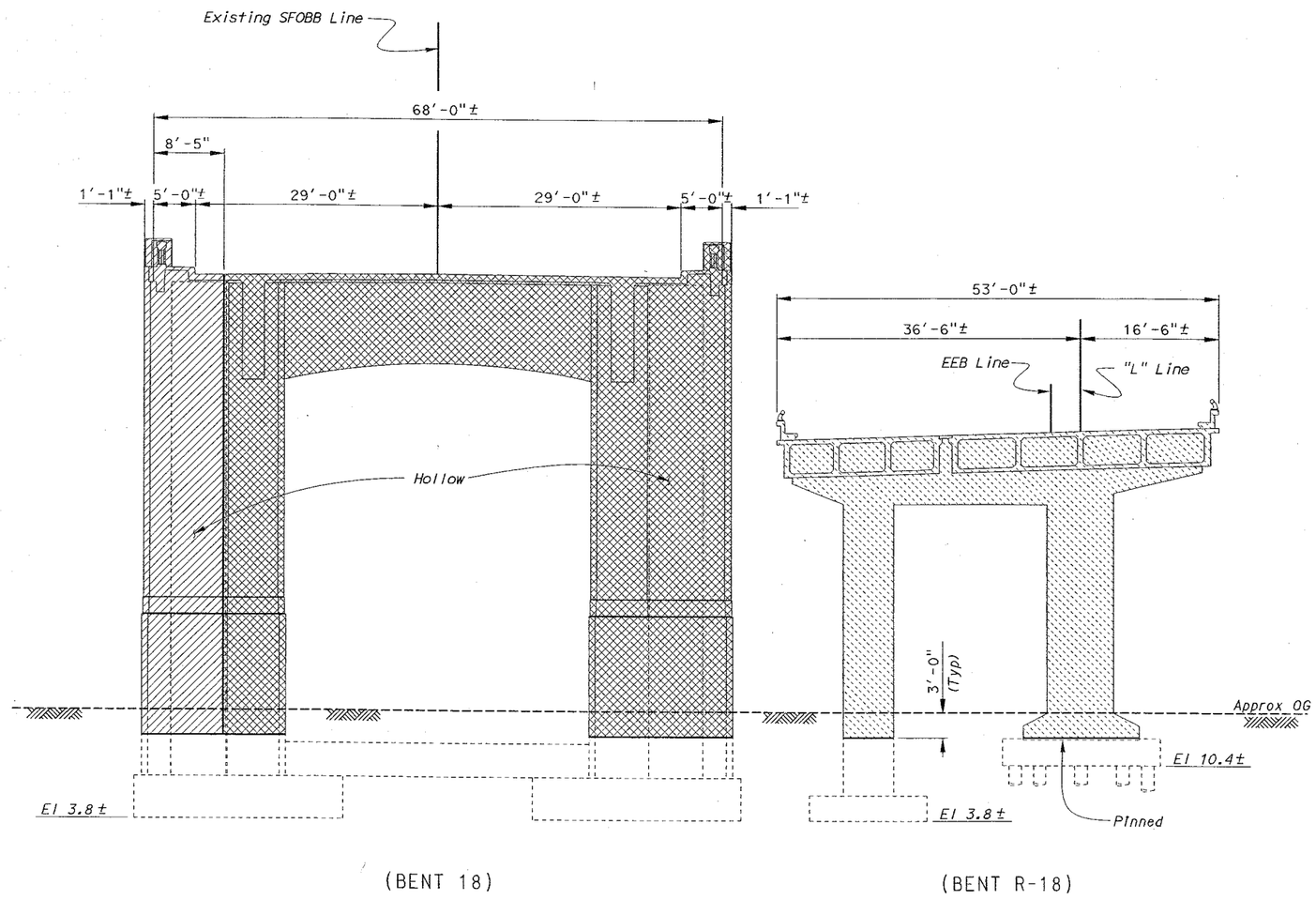

ELEVATION

1/8" = 1'-0"

LEGEND

- Indicates Demolation Limits
- Indicates Limits of Stage 1 Bridge Removal
- Indicates Limits of Stage 3 Bridge Removal
- Indicates Limits of Stage 5 Bridge Removal

Notes:

1. All piles not shown.
2. For bent locations and details not shown, see "Demolition Layout Plan No. 3" sheet.

NOTE;
THE CONTRACTOR SHALL VERIFY ALL CONTROLLING FIELD DIMENSIONS BEFORE ORDERING OR FABRICATING ANY MATERIAL.

	BY	CHECKED
DESIGN	K. Bhala	J. Zhang
DETAILS	FD/JK/RN/DE	J. Zhang
QUANTITIES	P. Von Savoye	K. Bhala

STRUCTURES DESIGN DETAIL SHEET (ENGLISH) (REV. 1/1/99)

ORIGINAL SCALE IN INCHES FOR REDUCED PLANS 0 1 2 3

SFOBB - SEISMIC RETROFIT PROJECT NO. 12

STATE OF CALIFORNIA DEPARTMENT OF TRANSPORTATION

DIVISION OF STRUCTURES STRUCTURE DESIGN 2

BRIDGE NO. 34-0126RL

POST MILE 5.07/5.67

CU 04
EA 0435V1

FILE => amudd18.dgn

SFOBB - SAN FRANCISCO APPROACH (REPLACE)

MAINLINE

DEMOLITION DETAILS BENT NO. 18

DISREGARD PRINTS BEARING EARLIER REVISION DATES → 11-8-00 11-15-00 5-10-01

SHEET 295 OF 419

USERNAME => trpierce DATE PLOTTED => 22-JUN-2002 TIME PLOTTED => 12:09

DIST	COUNTY	ROUTE	POST MILES TOTAL PROJECT	SHEET No	TOTAL SHEETS
04	SF	80	4.9/5.9	1177	1511

REGISTERED CIVIL ENGINEER 12-03-01

6-17-02
PLANS APPROVAL DATE

REGISTERED PROFESSIONAL ENGINEER G. Setberg No. 47829 Exp. 12-31-03 CIVIL STATE OF CALIFORNIA

The State of California or its officers or agents shall not be responsible for the accuracy or completeness of electronic copies of this plan sheet.

Caltrans now has a web site! To get to the web site, go to: http://www.dot.ca.gov

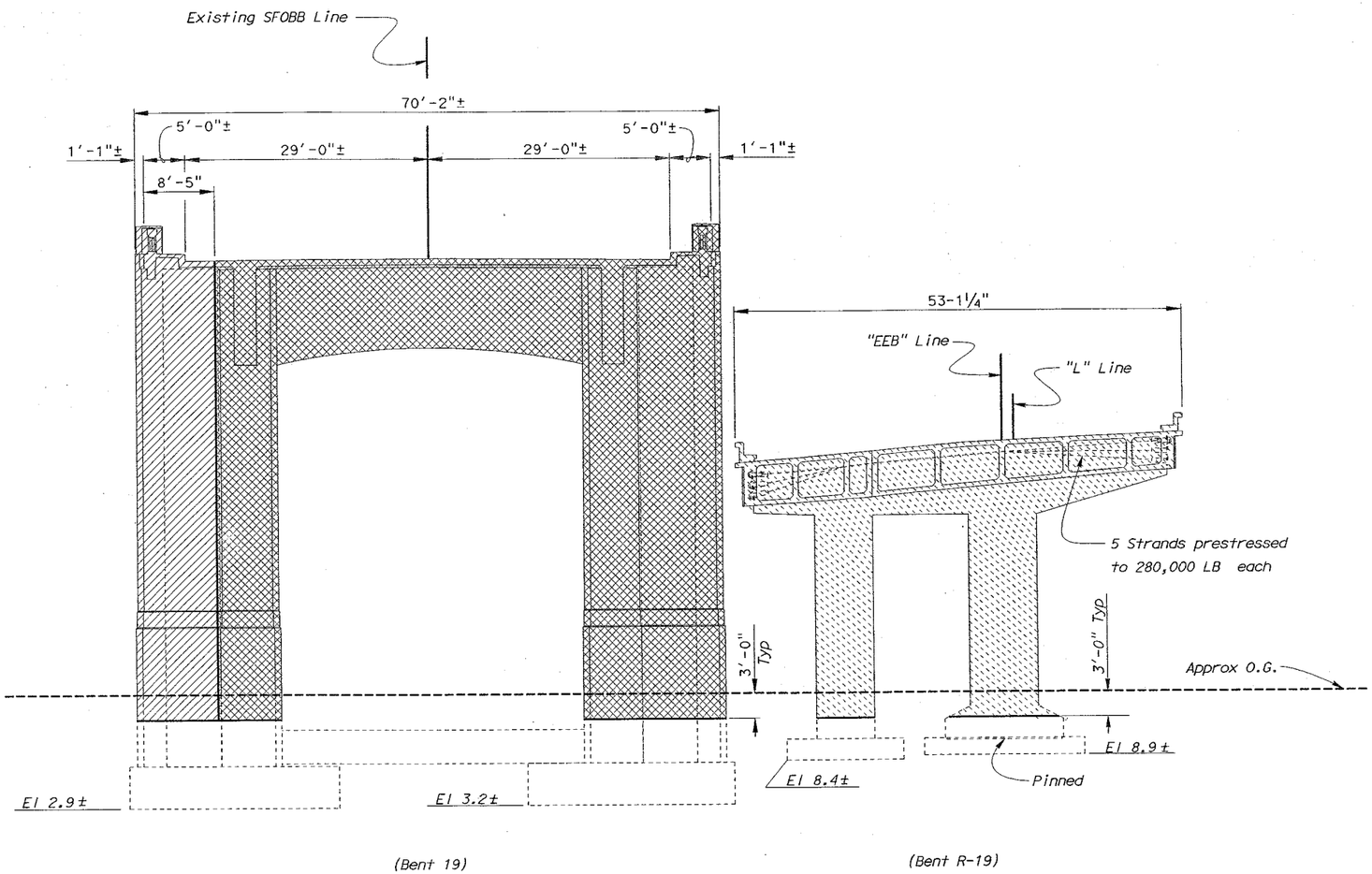

ELEVATION

Scale ⅛" - 1'-0"

LEGEND

- Indicates Demolation Limits
- Indicates Limits of Stage 1 Bridge Removal
- Indicates Limits of Stage 3 Bridge Removal
- Indicates Limits of Stage 5 Bridge Removal

Note:

1. For bent locations and details not shown, see "Demolition Layout Plan No. 3" sheet.

NOTE;
THE CONTRACTOR SHALL VERIFY ALL CONTROLLING FIELD DIMENSIONS BEFORE ORDERING OR FABRICATING ANY MATERIAL.

SFOBB - SEISMIC RETROFIT PROJECT NO. 12

SFOBB - SAN FRANCISCO APPROACH (REPLACE)

MAINLINE

DEMOLITION DETAILS BENT NO. 19

	BY	CHECKED
DESIGN	K. Bhala	J. Zhang
DETAILS	FD/JK/RN/DE	J. Zhang
QUANTITIES	P. Von Savoye	K. Bhala

STATE OF CALIFORNIA DEPARTMENT OF TRANSPORTATION

DIVISION OF STRUCTURES STRUCTURE DESIGN 2

BRIDGE NO. 34-0126RL

POST MILE 5.07/5.67

CU 04
EA 0435V1

DISREGARD PRINTS BEARING EARLIER REVISION DATES

REVISION DATES (PRELIMINARY STAGE ONLY) 11-9-00 11-17-00 5-10-01 1-22-01 9-18-01

SHEET 296 OF 419

STRUCTURES DESIGN DETAIL SHEET (ENGLISH) (REV. 1/1/99)

ORIGINAL SCALE IN INCHES FOR REDUCED PLANS 0 1 2 3

FILE => amudd19.dgn

USERNAME => tpierce DATE PLOTTED => 22-JUN-2002 TIME PLOTTED => 12:41

DIST	COUNTY	ROUTE	POST MILES TOTAL PROJECT	SHEET No.	TOTAL SHEETS
04	SF	80	4.9/5.9	1178	1511

REGISTERED CIVIL ENGINEER 12-03-01

6-17-02
PLANS APPROVAL DATE

REGISTERED PROFESSIONAL ENGINEER G. Setberg No. 47829 Exp. 12-31-03 CIVIL STATE OF CALIFORNIA

The State of California or its officers or agents shall not be responsible for the accuracy or completeness of electronic copies of this plan sheet.

Caltrans now has a web site! To get to the web site, go to: http://www.dot.ca.gov

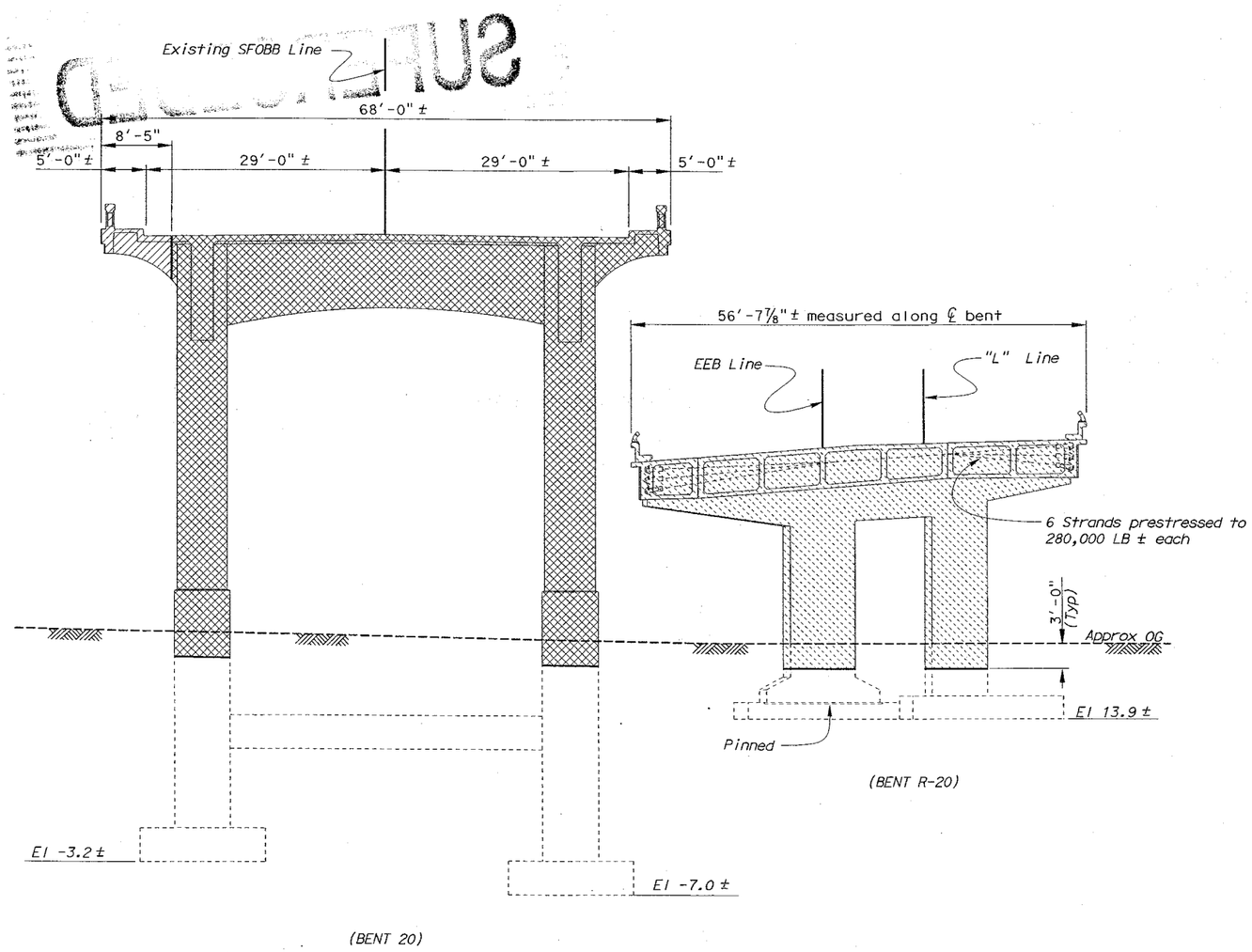

ELEVATION

⅛" = 1'-0"

LEGEND

- Indicates Demolation Limits
- Indicates Limits of Stage 1 Bridge Removal
- Indicates Limits of Stage 3 Bridge Removal
- Indicates Limits of Stage 5 Bridge Removal

Notes:

1. For bent locations and details not shown, see "Demolition Layout Plan No. 3" sheet.

NOTE;
THE CONTRACTOR SHALL VERIFY ALL CONTROLLING FIELD DIMENSIONS BEFORE ORDERING OR FABRICATING ANY MATERIAL.

SFOBB - SEISMIC RETROFIT PROJECT NO. 12

SFOBB - SAN FRANCISCO APPROACH (REPLACE)

	BY	CHECKED
DESIGN	K. Bhala	J. Zhang
DETAILS	FD/JK/RN/DE	J. Zhang
QUANTITIES	P. Von Savoye	K. Bhala

STATE OF CALIFORNIA
DEPARTMENT OF TRANSPORTATION

DIVISION OF STRUCTURES
STRUCTURE DESIGN 2

BRIDGE NO. 34-0126RL
POST MILE 5.07/5.67

MAINLINE

DEMOLITION DETAILS BENT NO.20

STRUCTURES DESIGN DETAIL SHEET (ENGLISH) (REV. 1/1/99)

ORIGINAL SCALE IN INCHES FOR REDUCED PLANS 0 1 2 3

CU 04
EA 0435V1

DISREGARD PRINTS BEARING EARLIER REVISION DATES

REVISION DATES (PRELIMINARY STAGE ONLY) 11-16-00 5-11-01

SHEET 297 OF 419

FILE => amudd20.dgn

USERNAME => frpierce DATE PLOTTED => 22-JUN-2002 TIME PLOTTED => 12:10

DIST	COUNTY	ROUTE	TOTAL PROJECT	No	SHEETS
04	SF	80	4.9/5.9	1179R	1511

G. Setberg
REGISTERED CIVIL ENGINEER
12-03-01

6-17-02
PLANS APPROVAL DATE

REGISTERED PROFESSIONAL ENGINEER G. Setberg No. 47829 Exp. 12-31-03 CIVIL STATE OF CALIFORNIA

The State of California or its officers or agents shall not be responsible for the accuracy or completeness of electronic copies of this plan sheet.

Caltrans now has a web site! To get to the web site, go to: http://www.dot.ca.gov

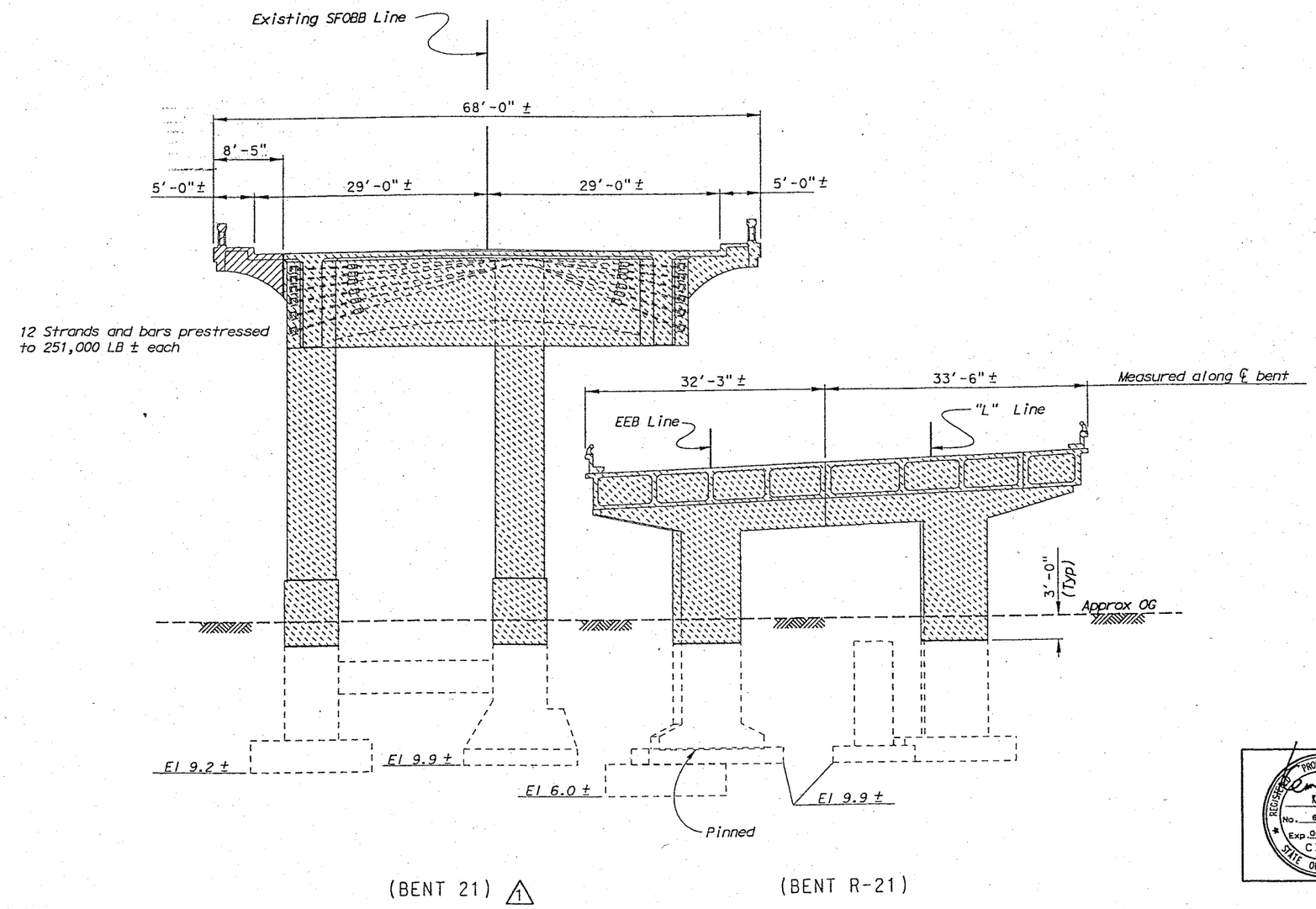

LEGEND

- Indicates Demolition Limits
- Indicates Limits of Stage 1 Bridge Removal
- Indicates Limits of Stage 5 Bridge Removal

Notes:

1. All piles not shown.
2. For bent locations and details not shown, see "Demolition Layout Plan No. 3", "Demolition Layout Plan No. 4" and "Demolition Layout Plan No. 5" sheets.

REGISTERED PROFESSIONAL ENGINEER K. VO No. 63139 Exp. 06-30-06 CIVIL STATE OF CALIFORNIA

MARK	DATE	DESCRIPTIONS	BY	CH'D
1	12-15-03	Details Modified	EW	KV

REVISIONS

CONTRACT CHANGE ORDER NO. ____
SHEET ____ OF ____

NOTE;
THE CONTRACTOR SHALL VERIFY ALL CONTROLLING FIELD DIMENSIONS BEFORE ORDERING OR FABRICATING ANY MATERIAL.

	BY	CHECKED
DESIGN	K. Bhaia	J. Zhang
DETAILS	FD/JK/RN/DE	J. Zhang
QUANTITIES	P. Von Savoye	K. Bhaia

STRUCTURES DESIGN DETAIL SHEET (ENGLISH) (REV. 1/1/99)

ORIGINAL SCALE IN INCHES FOR REDUCED PLANS 0 1 2 3

SFOBB - SEISMIC RETROFIT PROJECT NO. 12

STATE OF CALIFORNIA
DEPARTMENT OF TRANSPORTATION

DIVISION OF STRUCTURES
STRUCTURE DESIGN 2

BRIDGE NO. 34-0126RL
POST MILE 5.07/5.67

CU 04
EA 0435V1

DISREGARD PRINTS BEARING EARLIER REVISION DATES → 11-17-00 5-11-01

SFOBB - SAN FRANCISCO APPROACH (REPLACE

MAINLINE

DEMOLITION DETAILS BENT NO.21

REVISION DATES (PRELIMINARY STAGE ONLY)

SHEET 298 OF 419

FILE => amudd21.dgn

DIST	COUNTY	ROUTE	POST MILES TOTAL PROJECT	SHEET No	TOTAL SHEETS
04	SF	80	4.9/5.9	1180	1511

REGISTERED CIVIL ENGINEER 12-03-01

6-17-02
PLANS APPROVAL DATE

REGISTERED PROFESSIONAL ENGINEER G. Setberg No. 47829 Exp. 12-31-03 CIVIL STATE OF CALIFORNIA

The State of California or its officers or agents shall not be responsible for the accuracy or completeness of electronic copies of this plan sheet.

Caltrans now has a web site! To get to the web site, go to: http://www.dot.ca.gov

LEGEND

- *Indicates Demolation Limits*
- *Indicates Limits of Stage 1 Bridge Removal*
- *Indicates Limits of Stage 5 Bridge Removal*

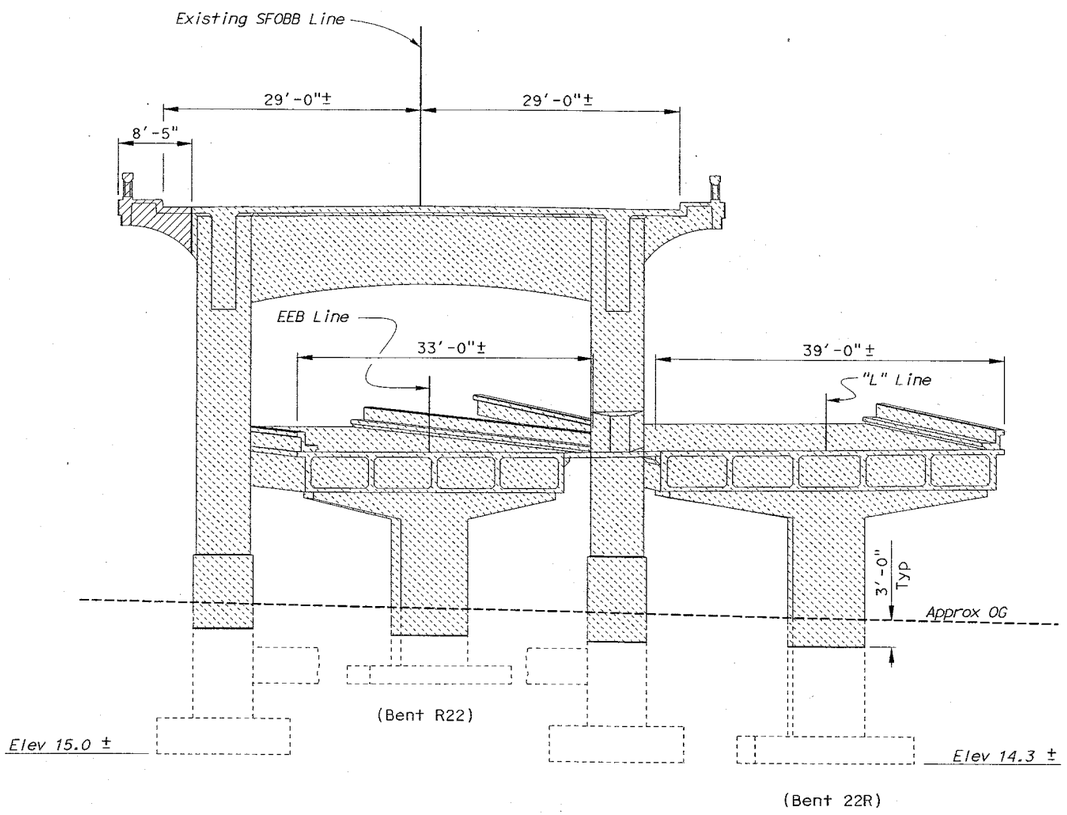

ELEVATION BENT 22

Scale: 1/8" = 1'-0"

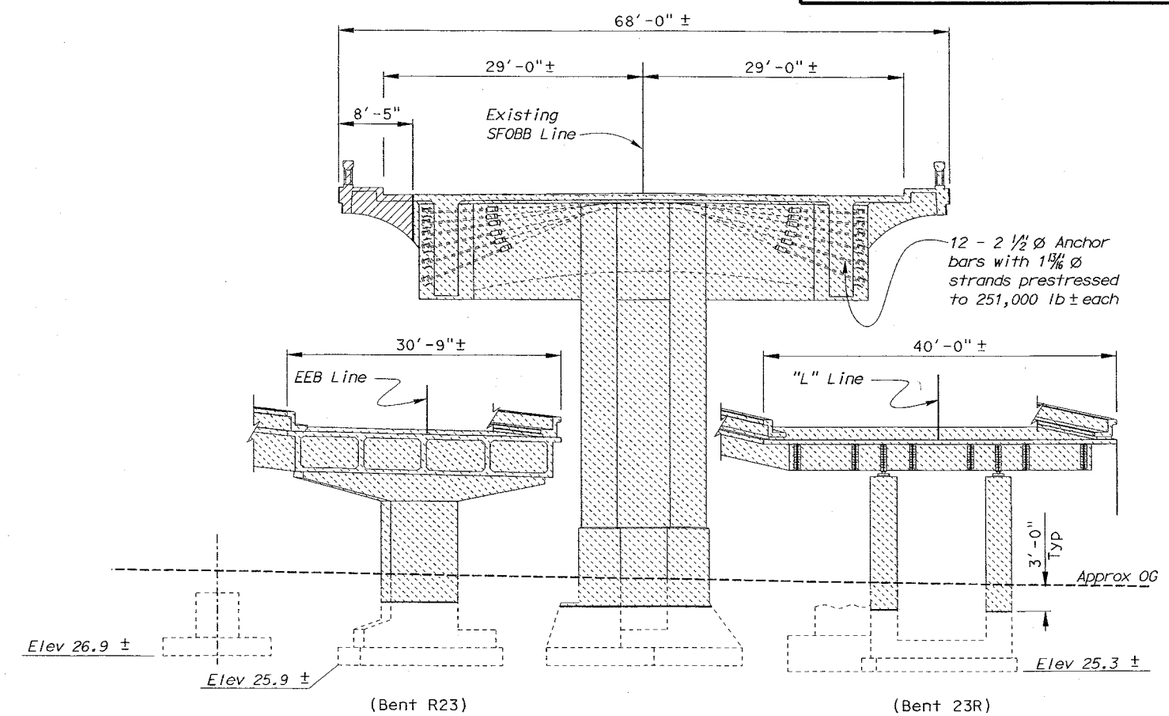

ELEVATION BENT 23

Scale: 1/8" = 1'-0"

Notes:

1. *For bent locations and details not shown, see "Demolition Layout Plan No. 4" and "Demolition Layout Plan No. 5" sheets.*
2. *Dimensions given are normal to layout lines.*

NOTE;
THE CONTRACTOR SHALL VERIFY ALL CONTROLLING FIELD DIMENSIONS BEFORE ORDERING OR FABRICATING ANY MATERIAL.

SFOBB - SEISMIC RETROFIT PROJECT NO. 12

SFOBB - SAN FRANCISCO APPROACH (REPLACE)

MAINLINE

DEMOLITION DETAILS BENTS NO.22 AND 23

	BY	CHECKED
DESIGN	K. Bhala	J. Zhang
DETAILS	FD/JK/RN/DE	J. Zhang
QUANTITIES	P. Von Savoye	K. Bhala

STATE OF CALIFORNIA DEPARTMENT OF TRANSPORTATION

DIVISION OF STRUCTURES STRUCTURE DESIGN 2

BRIDGE NO. 34-0126RL

POST MILE 5.07/5.67

CU 04
EA 0435V1

DISREGARD PRINTS BEARING EARLIER REVISION DATES

REVISION DATES (PRELIMINARY STAGE ONLY) 10-10-00 10-19-00 11-14-00 5-14-01 7-22-01

SHEET 299 OF 419

STRUCTURES DESIGN DETAIL SHEET (ENGLISH) (REV. 1/1/99)

ORIGINAL SCALE IN INCHES FOR REDUCED PLANS 0 1 2 3

FILE => amudd22.dgn

USERNAME => tripierce DATE PLOTTED => 22-JUN-2002 TIME PLOTTED => 12:11

DIST	COUNTY	ROUTE	POST MILES TOTAL PROJECT	SHEET No	TOTAL SHEETS
04	SF	80	4.9/5.9	1181	1511

REGISTERED CIVIL ENGINEER 12-03-01

6-17-02
PLANS APPROVAL DATE

REGISTERED PROFESSIONAL ENGINEER G. Setberg No. 47829 Exp. 12-31-03 CIVIL STATE OF CALIFORNIA

The State of California or its officers or agents shall not be responsible for the accuracy or completeness of electronic copies of this plan sheet.

Caltrans now has a web site! To get to the web site, go to: http://www.dot.ca.gov

LEGEND

Indicates Demolation Limits

Indicates Limits of Stage 1 Bridge Removal

Indicates Limits of Stage 5 Bridge Removal

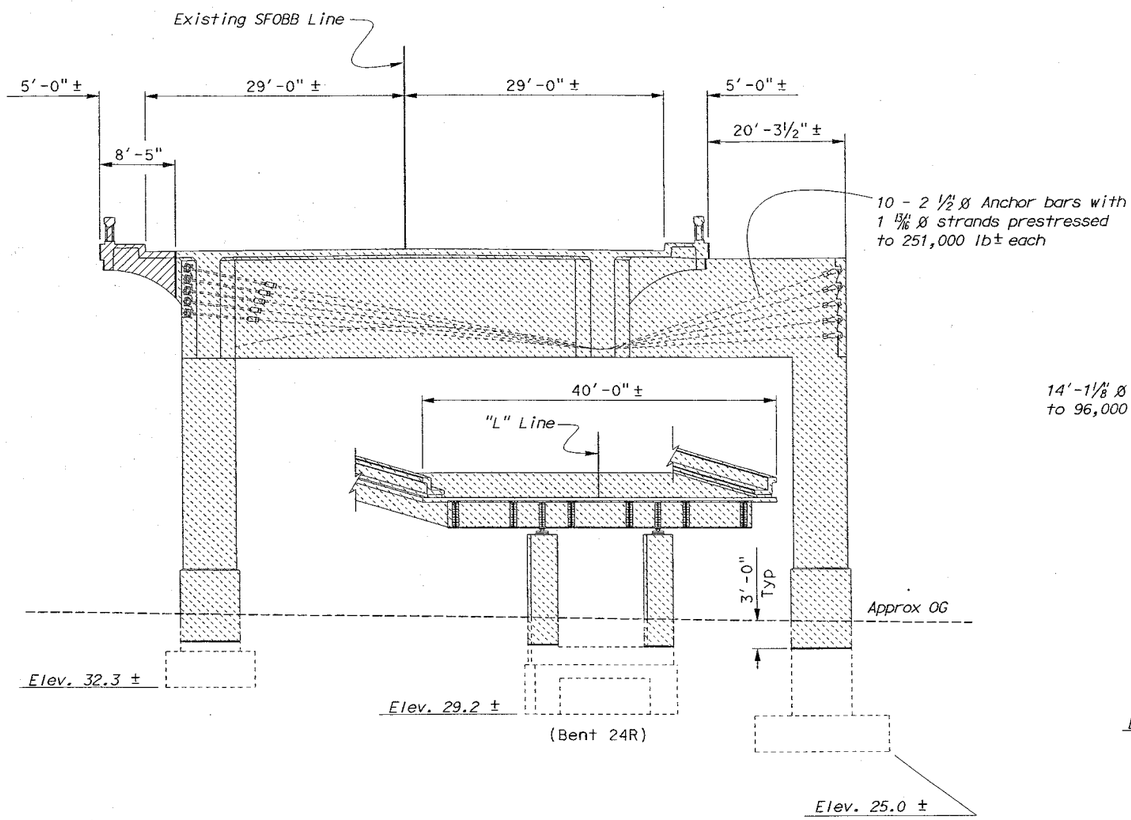

ELEVATION BENT 24

Scale ⅛" = 1'-0"

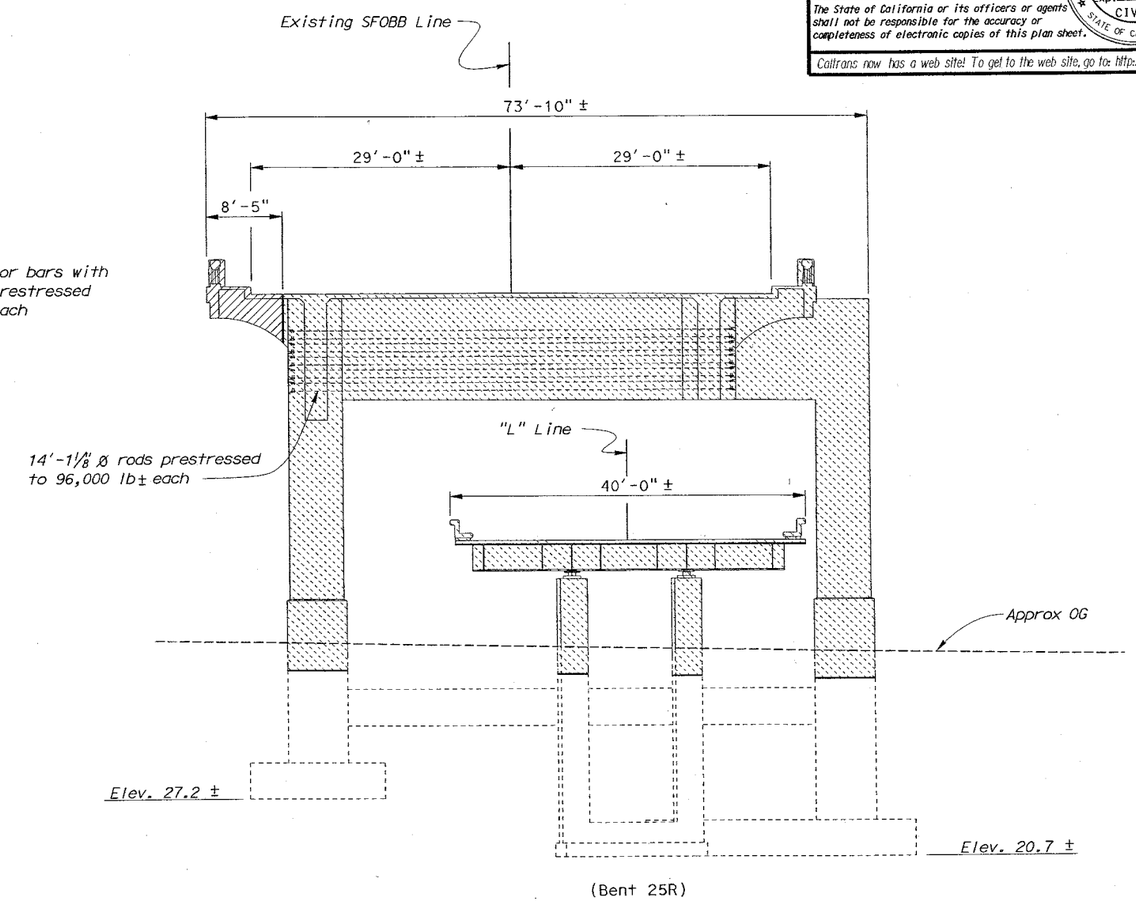

ELEVATION BENT 25

Scale ⅛" = 1'-0"

NOTE;
THE CONTRACTOR SHALL VERIFY ALL CONTROLLING FIELD DIMENSIONS BEFORE ORDERING OR FABRICATING ANY MATERIAL.

Notes:

1. *For bent locations and details not shown, see "Demolition Layout Plan No. 4" and "Demolition Layout Plan No. 5" sheets.*
2. *Dimensions given are normal to layout lines*

	BY	CHECKED
DESIGN	K. Bhala	J. Zhang
DETAILS	FD/JK/RN/DE	J. Zhang
QUANTITIES	M. Herron	K. Bhala

STRUCTURES DESIGN DETAIL SHEET (ENGLISH) (REV. 1/1/99)

ORIGINAL SCALE IN INCHES FOR REDUCED PLANS 0 1 2 3

SFOBB - SEISMIC RETROFIT PROJECT NO. 12

STATE OF CALIFORNIA DEPARTMENT OF TRANSPORTATION

DIVISION OF STRUCTURES STRUCTURE DESIGN 2

BRIDGE NO. 34-0126RL

POST MILE 5.07/5.67

CU 04
EA 0435V1

FILE => amudd24.dgn

SFOBB - SAN FRANCISCO APPROACH (REPLACE)

MAINLINE

DEMOLITION DETAILS BENTS NO. 24 AND 25

DISREGARD PRINTS BEARING EARLIER REVISION DATES

REVISION DATES (PRELIMINARY STAGE ONLY) 10-16-00 11-17-00 5-11-01 7-23-01

SHEET 300 OF 419

USERNAME => FHWA DATE PLOTTED => 22-JUN-2002 TIME PLOTTED => 12:11

DIST	COUNTY	ROUTE	POST MILES TOTAL PROJECT	SHEET No	TOTAL SHEETS
04	SF	80	4.9/5.9	1182	1511

REGISTERED CIVIL ENGINEER 12-03-01

6-17-02
PLANS APPROVAL DATE

REGISTERED PROFESSIONAL ENGINEER G. Setberg No. 47829 Exp. 12-31-03 CIVIL STATE OF CALIFORNIA

The State of California or its officers or agents shall not be responsible for the accuracy or completeness of electronic copies of this plan sheet.

Caltrans now has a web site! To get to the web site, go to: http://www.dot.ca.gov

LEGEND

- *Indicates Demolation Limits*
- *Indicates Limits of Stage 1 Bridge Removal*
- *Indicates Limits of Stage 5 Bridge Removal*

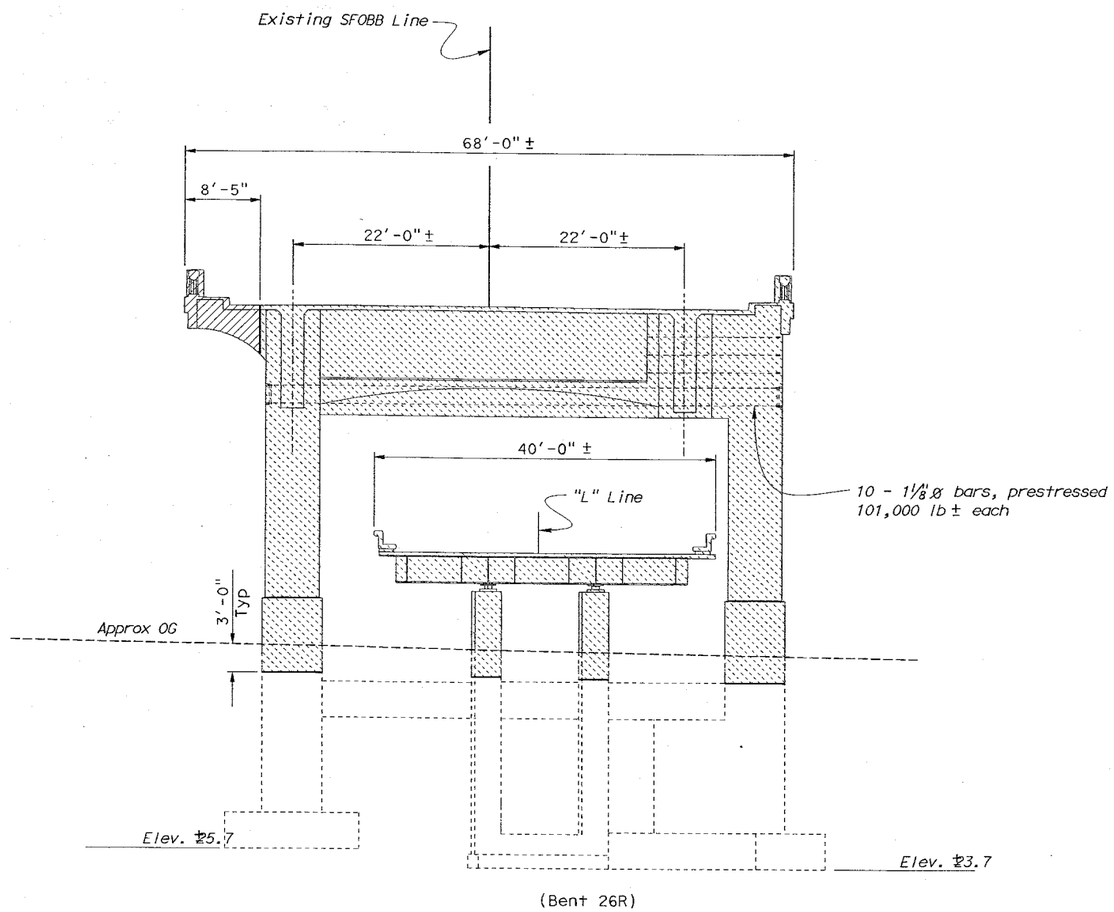

ELEVATION BENT 26

Scale 1/8" = 1'-0"

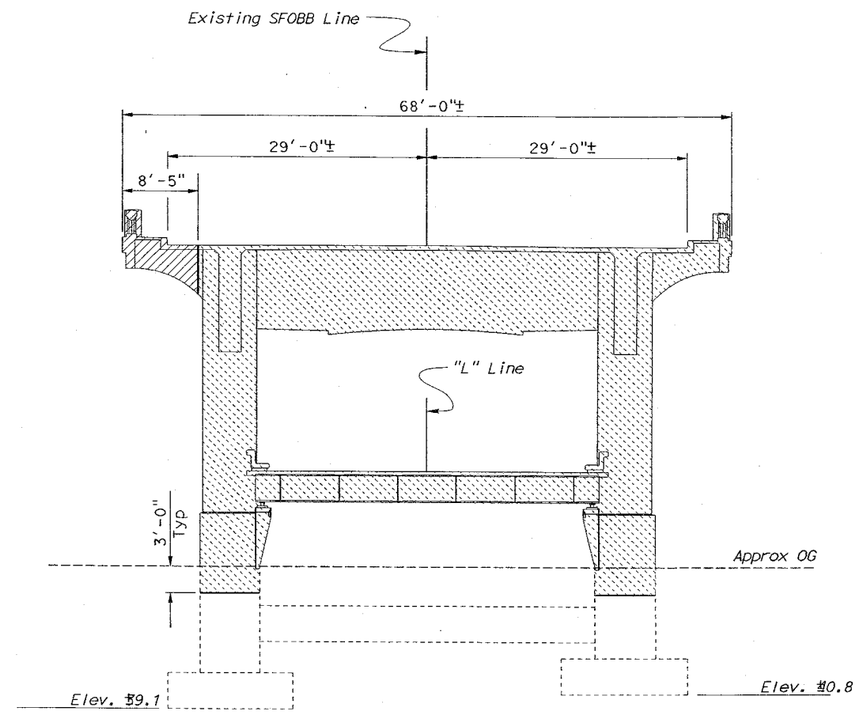

ELEVATION BENT 28

Scale 1/8" = 1'-0"

Note:

1. *Bent 26 and 26R shown, Bent 27 and 27R similar.*
2. *For locations and details not shown, see "Demolition Layout Plan No. 4" and "Demolition Layout Plan No. 5" sheets.*

NOTE;
THE CONTRACTOR SHALL VERIFY ALL CONTROLLING FIELD DIMENSIONS BEFORE ORDERING OR FABRICATING ANY MATERIAL.

	BY	CHECKED
DESIGN	K. Bhala	J. Zhang
DETAILS	FD/JK/RN/DE	J. Zhang
QUANTITIES	D. Abellon	K. Bhala

STRUCTURES DESIGN DETAIL SHEET (ENGLISH) (REV. 1/1/99)

ORIGINAL SCALE IN INCHES FOR REDUCED PLANS 0 1 2 3

SFOBB - SEISMIC RETROFIT PROJECT NO. 12

STATE OF CALIFORNIA DEPARTMENT OF TRANSPORTATION

DIVISION OF STRUCTURES STRUCTURE DESIGN 2

CU 04
EA 0435V1

FILE => amudd26.dgn

BRIDGE NO. 34-0126RL
POST MILE 5.07/5.67

SFOBB - SAN FRANCISCO APPROACH (REPLACE)

MAINLINE

DEMOLITION DETAILS BENTS NO.26,27 AND 28

DISREGARD PRINTS BEARING EARLIER REVISION DATES

REVISION DATES (PRELIMINARY STAGE ONLY) 10-17-00 10-24-00 11-17-00 5-11-01

SHEET 301 OF 419

USERNAME => tripierce DATE PLOTTED => 22-JUN-2002 TIME PLOTTED => 12:42

DIST	COUNTY	ROUTE	POST MILES TOTAL PROJECT	SHEET No	TOTAL SHEETS
04	SF	80	4.9/5.9	1183	1511

REGISTERED CIVIL ENGINEER 12-03-01

6-17-02
PLANS APPROVAL DATE

REGISTERED PROFESSIONAL ENGINEER G. Setberg No. 47 Exp. 12 CIV STATE OF

The State of California or its officers or agents shall not be responsible for the accuracy or completeness of electronic copies of this plan sheet.

Caltrans now has a web site! To get to the web site, go to: http:/ ...t.ca.gov

LEGEND

Indicates Demolation Limits

Indicates Limits of Stage 1 Bridge Removal

Indicates Limits of Stage 5 Bridge Removal

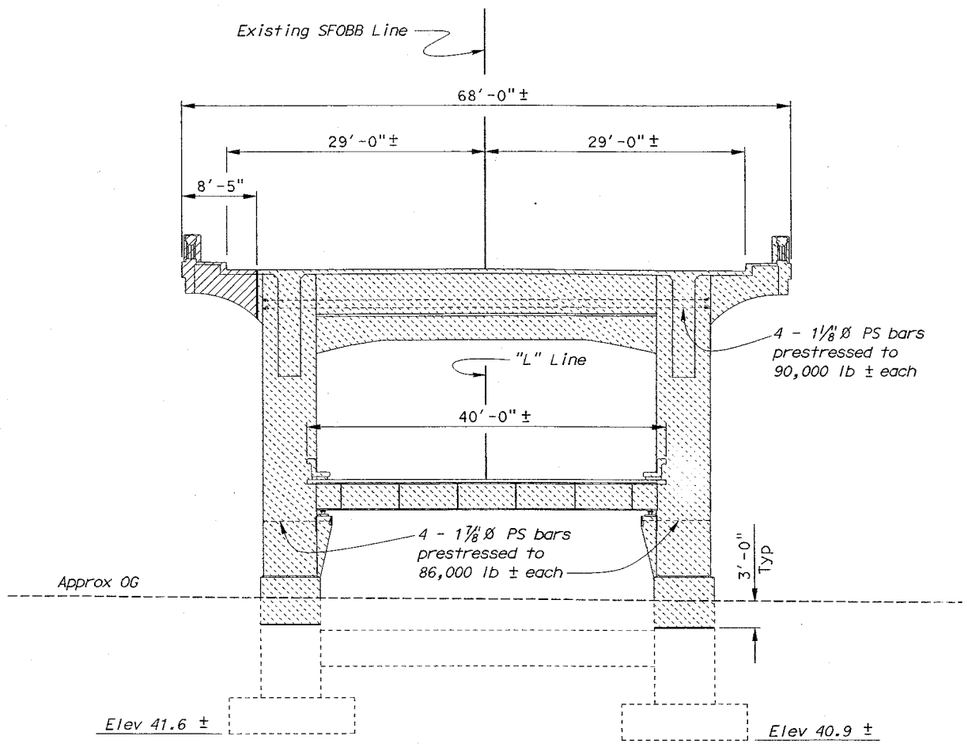

ELEVATION BENTS 29

⅛" = 1'-0"

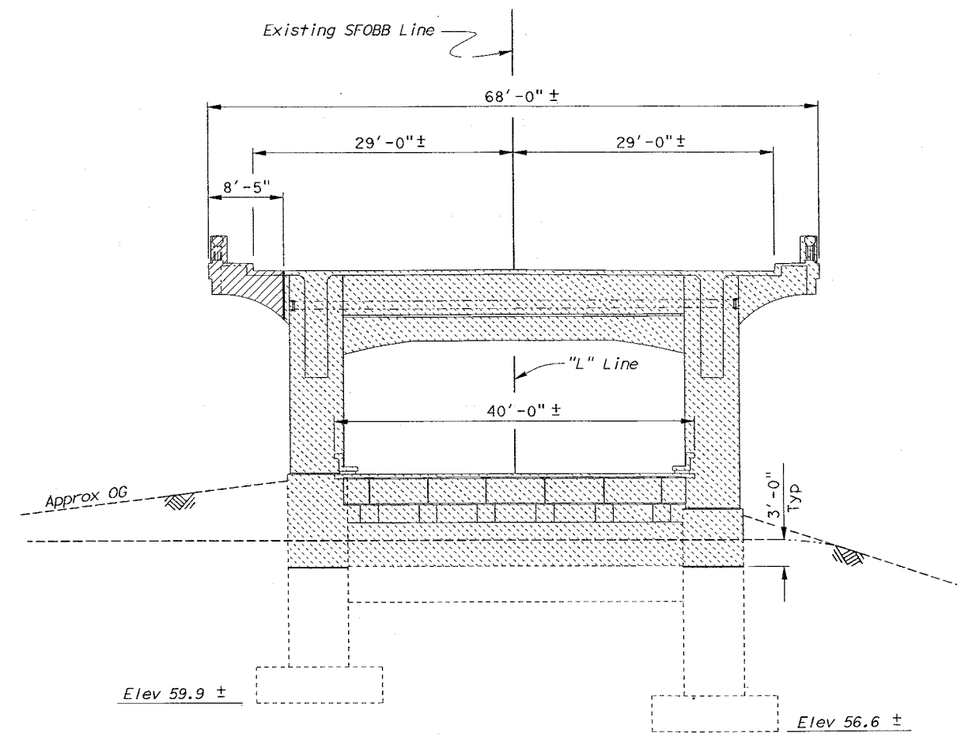

BENTS 35 & ABUTMENT 35

⅛" = 1'-0"

Notes:

1. Bent 29 shown, Bent 30,33, and 34 similar.
2. For bent locations and details not shown, see "Demolition Layout Plan No. 4" and "Demolition Layout Plan No. 5" sheets.
3. Dimensions given are normal to layout lines.

NOTE;
THE CONTRACTOR SHALL VERIFY ALL CONTROLLING FIELD DIMENSIONS BEFORE ORDERING OR FABRICATING ANY MATERIAL

DESIGN	BY K. Bhala	CHECKED J. Zhang	
DETAILS	BY FD/JK/RN/DE	CHECKED J. Zhang	
QUANTITIES	BY M. Herron	CHECKED K. Bhala	

STRUCTURES DESIGN DETAIL SHEET (ENGLISH) (REV. 1/1/98)

ORIGINAL SCALE IN INCHES FOR REDUCED PLANS 0 1 2 3

SFOBB - SEISMIC RETROFIT PROJECT NO. 12

STATE OF CALIFORNIA DEPARTMENT OF TRANSPORTATION

DIVISION OF STRUCTURES STRUCTURE DESIGN 2

CU 04
EA 0435V1

BRIDGE NO. 34-0126RL
POST MILE 5.07/5.67

SFOBB - SAN FRANCISCO APPROACH (REPLACE)

MAINLINE

DEMOLITION DETAILS BENTS NO.29,30,33,34,35

DISREGARD PRINTS BEARING EARLIER REVISION DATES

REVISION DATES (PRELIMINARY STAGE ONLY) 10-16-00 11-17-00 5-11-01

SHEET 302 OF 419

FILE => amudd29.dgn

USERNAME => TIME PLOTTED => 12:12 DATE PLOTTED => 22-JUN-2002

DIST	COUNTY	ROUTE	POST MILES TOTAL PROJECT	SHEET No	TOTAL SHEETS
04	SF	80	4.9/5.9	1184	1511

G. Setberg
REGISTERED CIVIL ENGINEER
12-03-01

6-17-02
PLANS APPROVAL DATE

REGISTERED PROFESSIONAL ENGINEER
G. Setberg
No. 47829
EXP. 12-31-03
CIVIL
STATE OF CALIFORNIA

The State of California or its officers or agents shall not be responsible for the accuracy or completeness of electronic copies of this plan sheet.

Caltrans now has a web site! To get to the web site, go to: http://www.dot.ca.gov

LEGEND

Indicates Demolition Limits

Indicates Limits of Stage 1 Bridge Removal

Indicates Limits of Stage 5 Bridge Removal

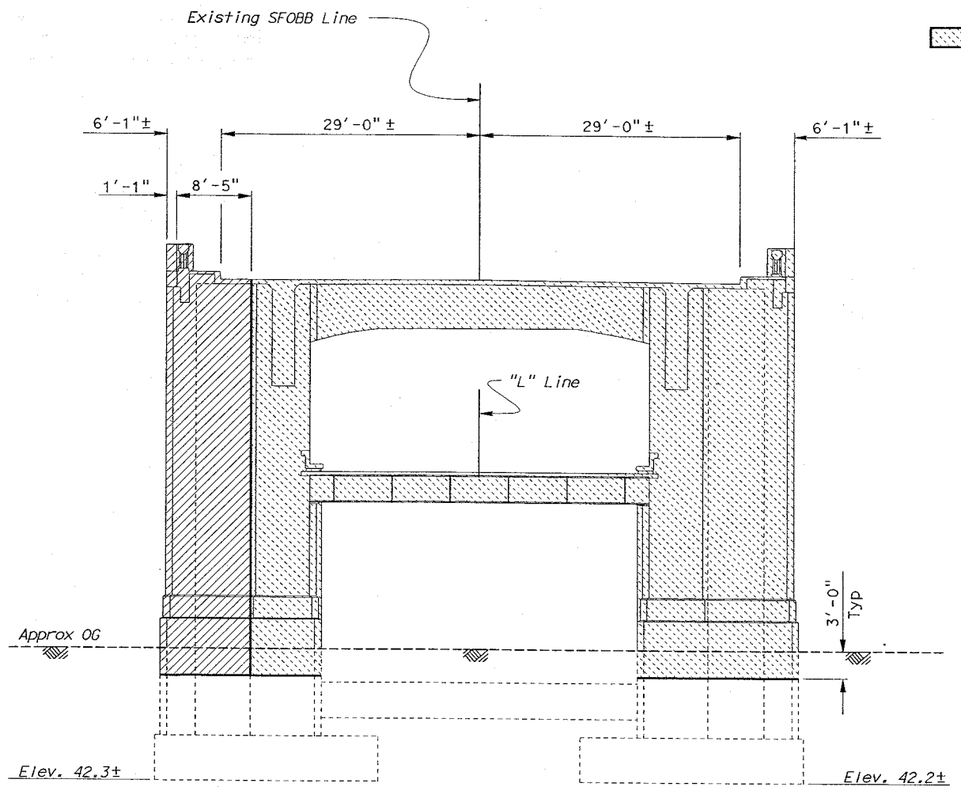

BENTS 31 AND 32

Scale 1/8"=1'-0"

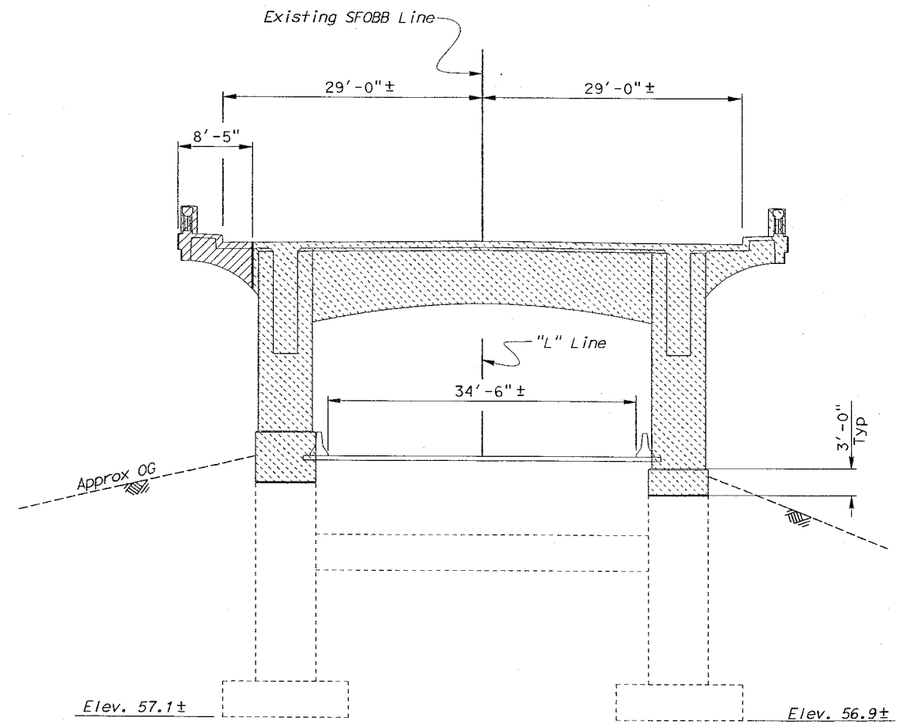

ELEVATION BENT 36 AND 37

Scale 1/8"=1'-0"

Notes:

1. *Bent 31 shown, Bent 32 similar.*
2. *Bent 36 shown, Bent 37 similar.*
3. *For bent locations and details not shown, see "Demolition Layout Plan No. 6" and "Demolition Layout Plan No. 7" sheets.*

NOTE;
THE CONTRACTOR SHALL VERIFY ALL CONTROLLING FIELD DIMENSIONS BEFORE ORDERING OR FABRICATING ANY MATERIAL.

	BY	CHECKED
DESIGN	K. Bhala	J. Zhang
DETAILS	FD/JK/RN/DE	J. Zhang
QUANTITIES	M. Herron	K. Bhala

SFOBB - SEISMIC RETROFIT PROJECT NO. 12

STATE OF CALIFORNIA
DEPARTMENT OF TRANSPORTATION

DIVISION OF STRUCTURES
STRUCTURE DESIGN 2

BRIDGE NO. 34-0126RL
POST MILE 5.07/5.67

SFOBB - SAN FRANCISCO APPROACH (REPLACE)

MAINLINE

DEMOLITION DETAILS BENTS NO.31,32,36 AND 37

STRUCTURES DESIGN DETAIL SHEET (ENGLISH) (REV. 1/1/99)

ORIGINAL SCALE IN INCHES FOR REDUCED PLANS 0 1 2 3

CU 04
EA 0435V1

DISREGARD PRINTS BEARING EARLIER REVISION DATES

REVISION DATES (PRELIMINARY STAGE ONLY) 10-25-00 11-28-00 5-31-01 7-23-01

SHEET 303 OF 419

FILE => amudd31.dgn

USERNAME => trpierce DATE PLOTTED => 22-JUN-2002 TIME PLOTTED => 12:13

DIST	COUNTY	ROUTE	POST MILES TOTAL PROJECT	SHEET No	TOTAL SHEETS
04	SF	80	4.9/5.9	1185	1511

REGISTERED CIVIL ENGINEER 12-03-01

6-17-02
PLANS APPROVAL DATE

REGISTERED PROFESSIONAL ENGINEER G. Setberg No. 47829 Exp. 12-31-03 CIVIL STATE OF CALIFORNIA

The State of California or its officers or agents shall not be responsible for the accuracy or completeness of electronic copies of this plan sheet.

Caltrans now has a web site! To get to the web site, go to: http://www.dot.ca.gov

LEGEND

- *Indicates Demolation Limits*
- *Indicates Limits of Stage 1 Bridge Removal*
- *Indicates Limits of Stage 5 Bridge Removal*

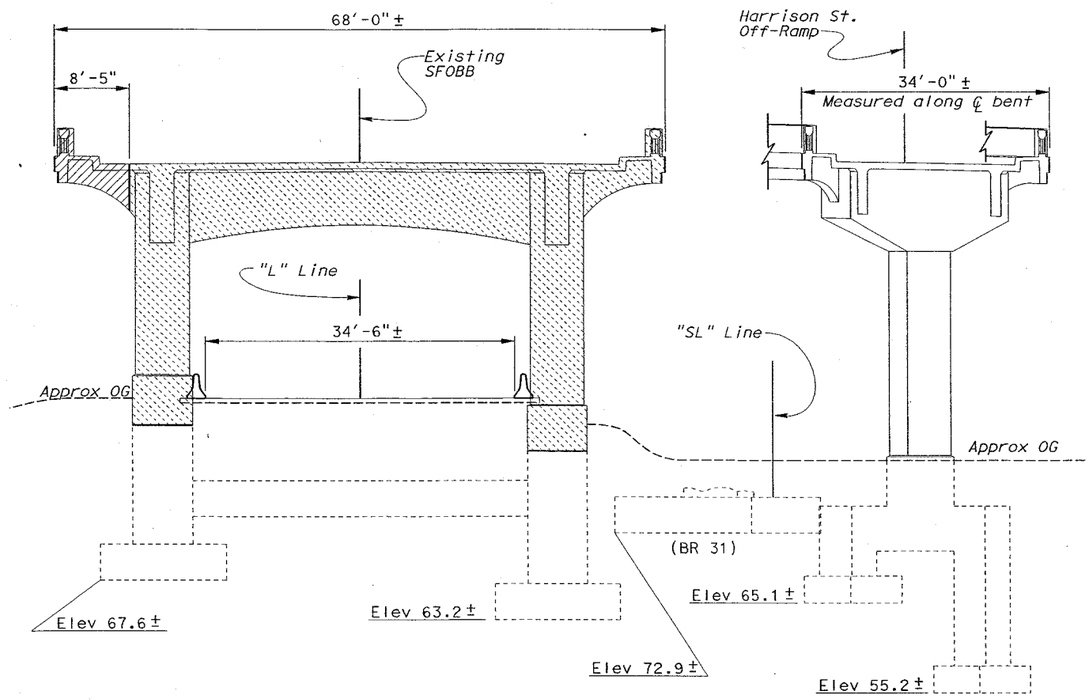

ELEVATION BENT 38

Scale 1/8" = 1'-0"

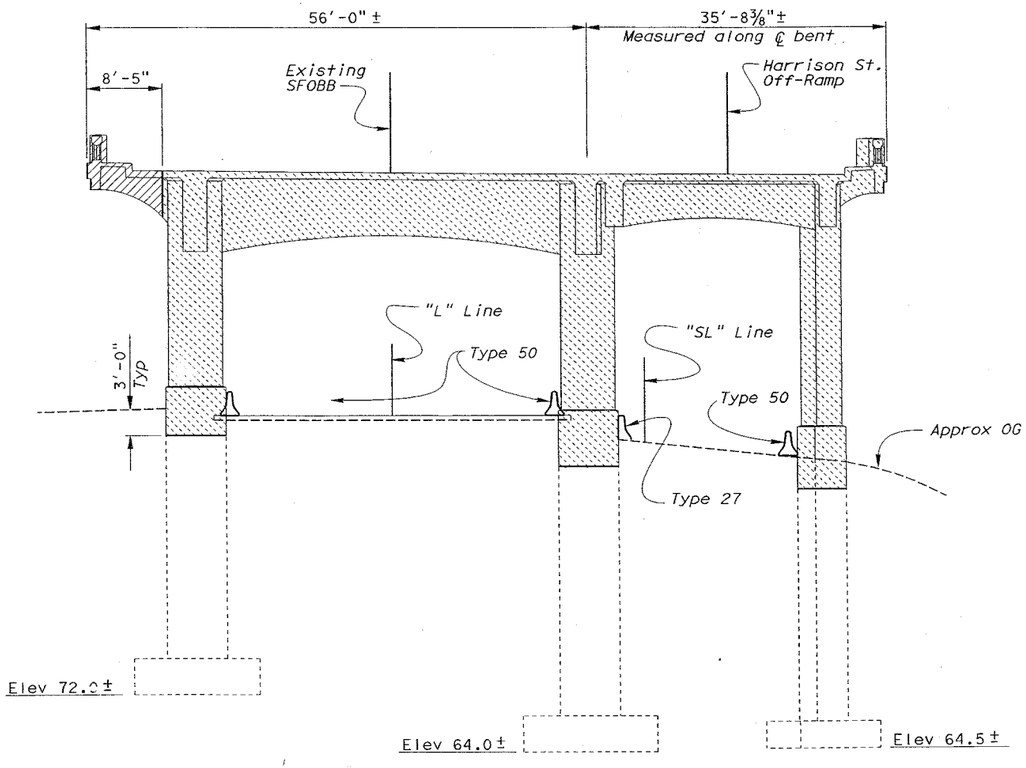

ELEVATION BENT 39

Scale 1/8" = 1'-0"

Notes:

1. *For bent locations, and details not shown, see "Demolition Layout Plan No. 6" and "Demolition Layout Plan No. 7" sheets.*
2. *For demolition of Harrison St. off ramp see, "SFOBB Seismic Retrofit Project No. 13" plans..*
3. *For Concerete Barrier removal see, "ROAD PLANS"*

NOTE;
THE CONTRACTOR SHALL VERIFY ALL CONTROLLING FIELD DIMENSIONS BEFORE ORDERING OR FABRICATING ANY MATERIAL.

	BY	CHECKED
DESIGN	K. Bhala	J. Zhang
DETAILS	FD/JK/DE	J. Zhang
QUANTITIES	P. Von Savoye	K. Bhala

SFOBB - SEISMIC RETROFIT PROJECT NO. 12

STATE OF CALIFORNIA DEPARTMENT OF TRANSPORTATION

DIVISION OF STRUCTURES STRUCTURE DESIGN 2

BRIDGE NO. 34-0126RL

POST MILE 5.07/5.67

SFOBB - SAN FRANCISCO APPROACH (REPLACE)

MAINLINE

DEMOLITION DETAILS BENTS NO.38 AND 39

STRUCTURES DESIGN DETAIL SHEET (ENGLISH) (REV. 1/1/99)

ORIGINAL SCALE IN INCHES FOR REDUCED PLANS 0 1 2 3

CU 04
EA 0435V1

DISREGARD PRINTS BEARING EARLIER REVISION DATES

REVISION DATES (PRELIMINARY STAGE ONLY) 10-22-00 11-13-00 4-28-01 4-28-01

SHEET 304 OF 419

FILE => amudd38.dgn

DATE PLOTTED => 22-JUN-2002 TIME PLOTTED => 12:13

USERNAME => TFT

DIST	COUNTY	ROUTE	POST MILES TOTAL PROJECT	SHEET No	TOTAL SHEETS
04	SF	80	4.9/5.9	1186	1511

G. Setberg
REGISTERED CIVIL ENGINEER
12-03-01

6-17-02
PLANS APPROVAL DATE

REGISTERED PROFESSIONAL ENGINEER
G. Setberg
No. 47829
Exp. 12-31-03
CIVIL
STATE OF CALIFORNIA

The State of California or its officers or agents shall not be responsible for the accuracy or completeness of electronic copies of this plan sheet.

Caltrans now has a web site! To get to the web site, go to: http://www.dot.ca.gov

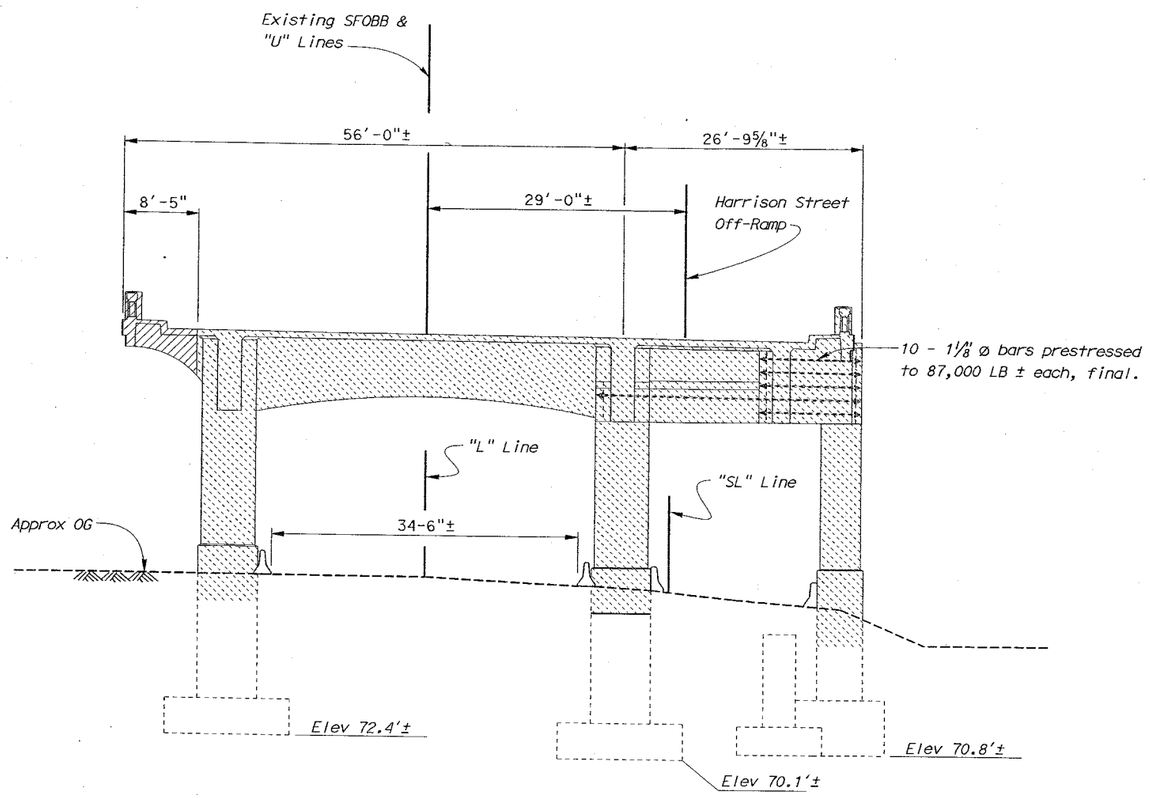

ELEVATION - BENT 40

Scale: 1/8"=1'-0"

LEGEND:

Limits of Stage 1 Bridge Removal

Limits of Stage 5 Bridge Removal

Notes:

1. For bent loctaions and details not shown, see "Demolition Layout Plans No. 5" sheet.
2. For concrete barrier removal see "ROAD PLANS"

NOTE:
THE CONTRACTOR SHALL VERIFY ALL CONTROLLING FIELD DIMENSIONS BEFORE ORDERING OR FABRICATING ANY MATERIAL.

	BY	CHECKED
DESIGN	K. Bhala	J. Zhang
DETAILS	JK/FD/MH/DE	J. Zhang
QUANTITIES	M. Herron	K. Bhala

STRUCTURES DESIGN DETAIL SHEET (ENGLISH) (REV. 1/1/99)

ORIGINAL SCALE IN INCHES FOR REDUCED PLANS 0 1 2 3

SFOBB - SEISMIC RETROFIT PROJECT NO. 12

STATE OF CALIFORNIA
DEPARTMENT OF TRANSPORTATION

DIVISION OF STRUCTURES
STRUCTURE DESIGN 2

BRIDGE NO. 34-0126RL
POST MILE 5.07/5.67

CU 04
EA 0435V1

FILE => amudd40.dgn

DISREGARD PRINTS BEARING EARLIER REVISION DATES

REVISION DATES (PRELIMINARY STAGE ONLY) 10-16-00 10-17-00 10-18-00 11-13-00 12-06-00 12-7-00 5-17-01

SFOBB - SAN FRANCISCO APPROACH (REPLACE)

MAINLINE

DEMOLITION DETAILS BENT NO.40

SHEET 305 OF 419

USERNAME => rrpierce DATE PLOTTED => 27-JUN-2002 TIME PLOTTED => 10:59

DIST	COUNTY	ROUTE	POST MILES TOTAL PROJECT	SHEET No	TOTAL SHEETS
04	SF	80	4.9/5.9	1187	1511

REGISTERED CIVIL ENGINEER 12-03-01

6-17-02
PLANS APPROVAL DATE

REGISTERED PROFESSIONAL ENGINEER G. Setberg No. 47829 Exp. 12-31-03 CIVIL STATE OF CALIFORNIA

The State of California or its officers or agents shall not be responsible for the accuracy or completeness of electronic copies of this plan sheet.

Caltrans now has a web site! To get to the web site, go to: http://www.dot.ca.gov

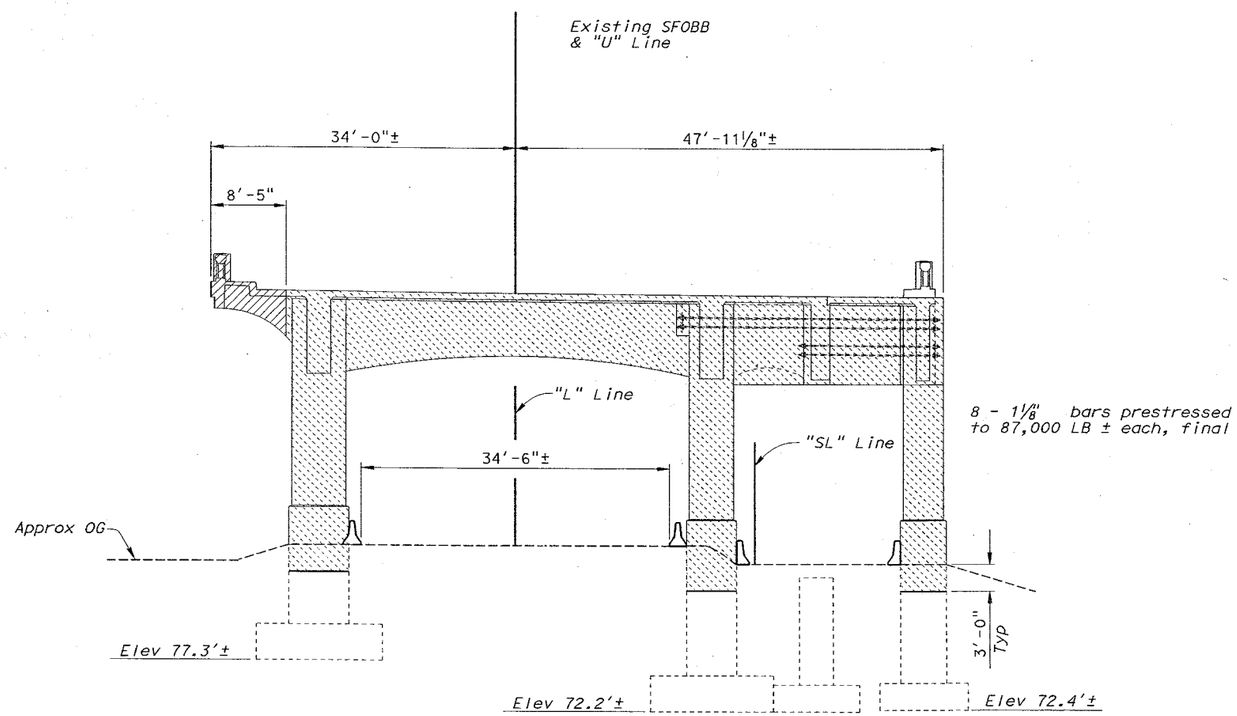

ELEVATION - BENT 41

Scale: ⅛"=1'-0"

LEGEND

Limits of Stage 1 Bridge Removal

Limits of Stage 5 Bridge Removal

Notes:

1. For bent locations and details not shown, see "Demoiltion Layout Plan No. 8" sheet.
2. For concrete barrier removal see "ROAD PLANS".

SFOBB - SEISMIC RETROFIT PROJECT NO. 12 | SFOBB - SAN FRANCISCO APPROACH (REPLACE)

	BY	CHECKED
DESIGN	K. Bhala	J. Zhang
DETAILS	JK/FD/MH/DE	J. Zhang
QUANTITIES	M. Herron	K. Bhala

STATE OF CALIFORNIA DEPARTMENT OF TRANSPORTATION

DIVISION OF STRUCTURES STRUCTURE DESIGN 2

BRIDGE NO. 34-0126RL
POST MILE 5.07/5.67

MAINLINE
DEMOLITION DETAILS BENT NO.41

STRUCTURES DESIGN DETAIL SHEET (ENGLISH) (REV. 1/1/99)

ORIGINAL SCALE IN INCHES FOR REDUCED PLANS 0 1 2 3

CU 04
EA 0435V1

DISREGARD PRINTS BEARING EARLIER REVISION DATES

REVISION DATES (PRELIMINARY) 10-14-00 10-17-00 10-18-00 10-19-00 11-13-00

SHEET 306 OF 419

FILE => gmudd41.dgn

USERNAME => HFC

DATE PLOTTED => 22-JUN-2002 TIME PLOTTED => 12:14

DIST	COUNTY	ROUTE	POST MILES TOTAL PROJECT	SHEET No	TOTAL SHEETS
04	SF	80	4.9/5.9	1188	1511

REGISTERED CIVIL ENGINEER 12-03-01

6-17-02
PLANS APPROVAL DATE

REGISTERED PROFESSIONAL ENGINEER G. Setberg No. 47829 Exp. 12-31-03 CIVIL STATE OF CALIFORNIA

The State of California or its officers or agents shall not be responsible for the accuracy or completeness of electronic copies of this plan sheet.

Caltrans now has a web site! To get to the web site, go to: http://www.dot.ca.gov

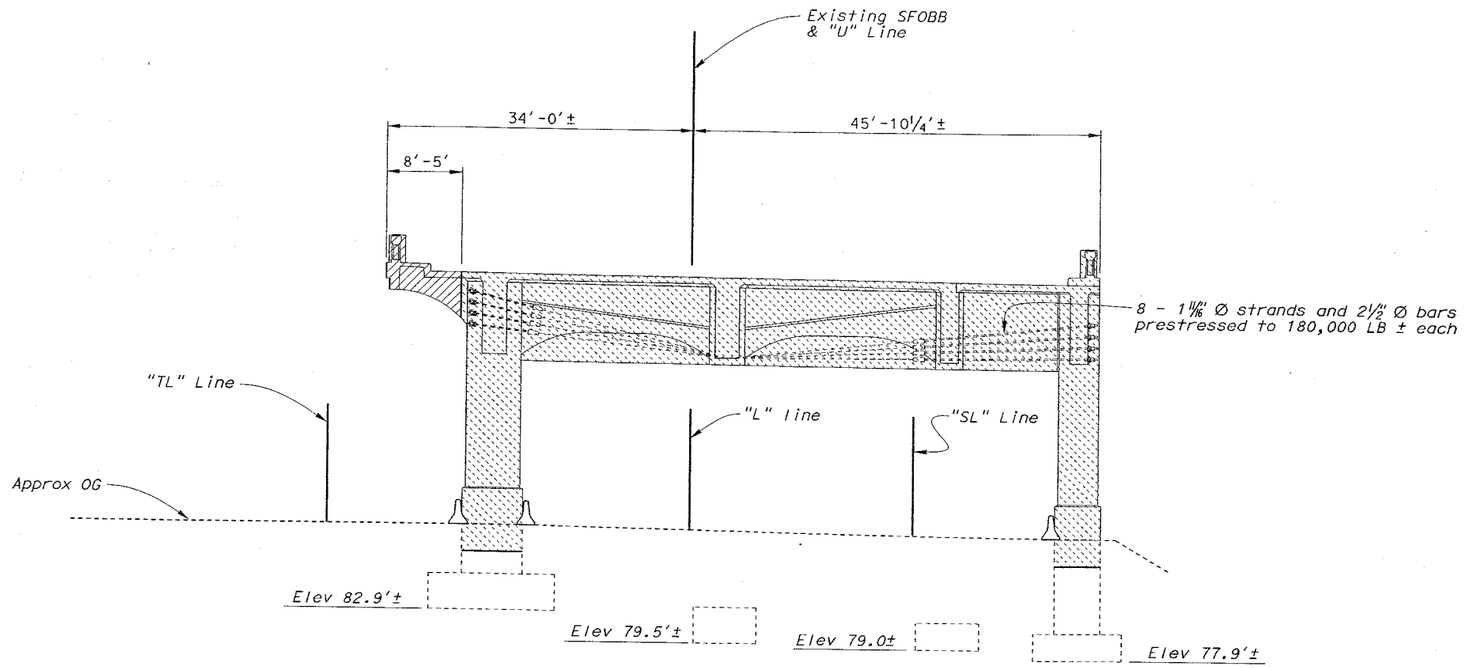

ELEVATION - BENT 42

Scale: 1/8"=1'-0"

LEGEND

Limits of Stage 1 Bridge removal

Limits of Stage 5 Bridge Removal

Notes:

1. For bent loctaions and details not shown, see "Demolition Layout Plan No. 8" sheet.
2. For concrete barrier removal see "ROAD PLANS".

NOTE:
THE CONTRACTOR SHALL VERIFY ALL CONTROLLING FIELD DIMENSIONS BEFORE ORDERING OR FABRICATING ANY MATERIAL.

	BY	CHECKED
DESIGN	K. Bhala	J. Zhang
DETAILS	JK/FD/MH/DE	J. Zhang
QUANTITIES	M. Herron	K. Bhala

STRUCTURES DESIGN DETAIL SHEET (ENGLISH) (REV. 1/1/99)

ORIGINAL SCALE IN INCHES FOR REDUCED PLANS 0 1 2 3

SFOBB - SEISMIC RETROFIT PROJECT NO. 12

STATE OF CALIFORNIA DEPARTMENT OF TRANSPORTATION

DIVISION OF STRUCTURES STRUCTURE DESIGN 2

BRIDGE NO. 34-0126RL

POST MILE 5.07/5.67

CU 04
EA 0435V1

FILE => amudd42.dgn

SFOBB - SAN FRANCISCO APPROACH (REPLACE)

MAINLINE

DEMOLITION DETAILS BENT NO.42

DISREGARD PRINTS BEARING EARLIER REVISION DATES

REVISION DATES (PRELIMINARY STAGE ONLY) 10-16-00 10-17-00 10-18-00 10-19-00 10-23-00 11-15-00 12-06-00 5-18-01

SHEET 307 OF 419

USERNAME => trplarce DATE PLOTTED => 22-JUN-2002 TIME PLOTTED => 12:15

DIST	COUNTY	ROUTE	POST MILES TOTAL PROJECT	SHEET No	TOTAL SHEETS
04	SF	80	4.9/5.9	1189	1511

REGISTERED CIVIL ENGINEER 12-03-01

6-17-02
PLANS APPROVAL DATE

REGISTERED PROFESSIONAL ENGINEER G. Setberg No. 47829 Exp. 12-31-03 CIVIL STATE OF CALIFORNIA

The State of California or its officers or agents shall not be responsible for the accuracy or completeness of electronic copies of this plan sheet.

Caltrans now has a web site! To get to the web site, go to: http://www.dot.ca.gov

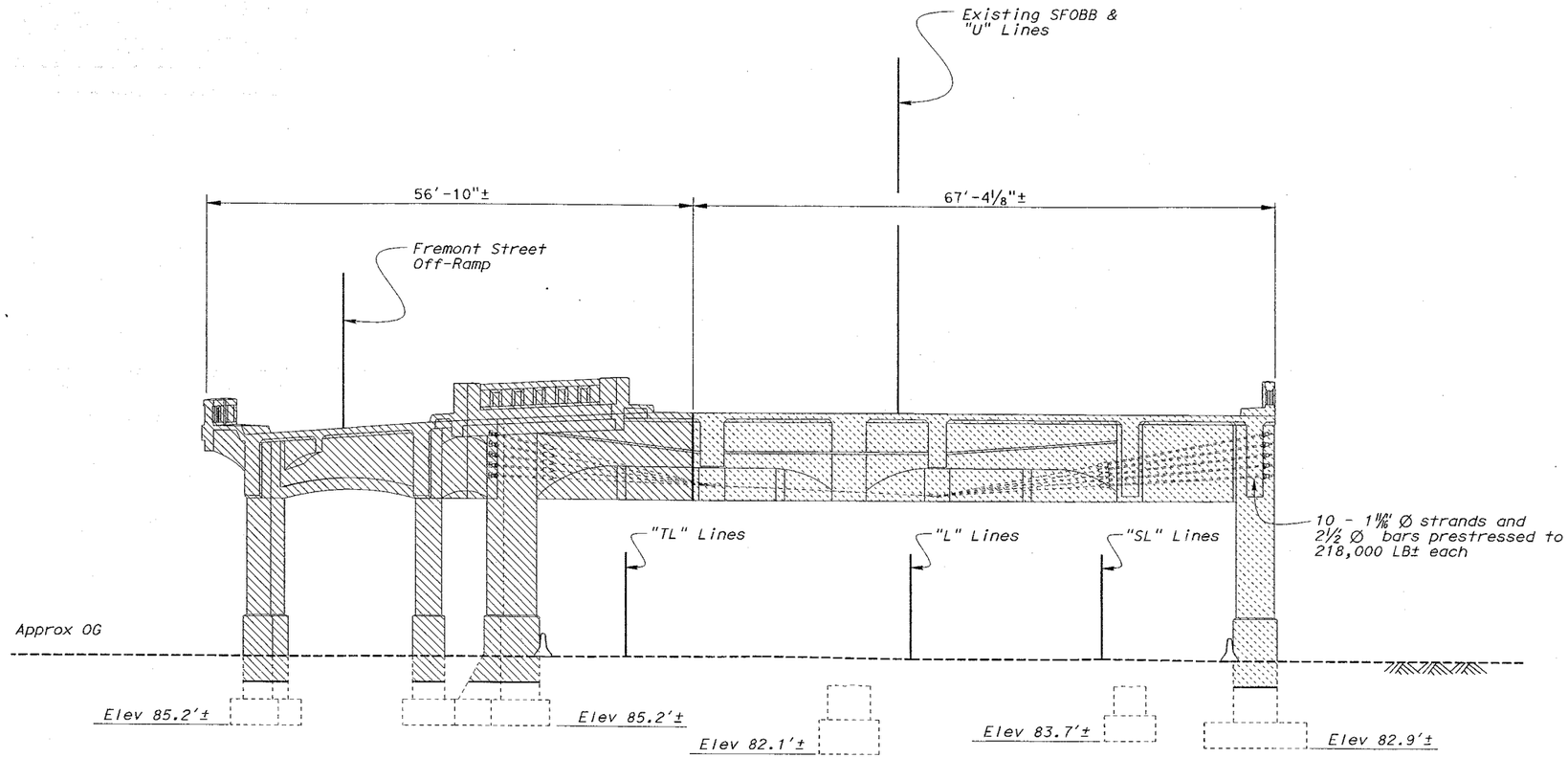

ELEVATION - BENT 43

Scale: ⅛"=1'-0"

LEGEND

Limits of Stage 2 Bridge Removal

Limits of Stage 5 Bridge Removal

1. For Fremont Street Off-Ramp removal, see "SFOBB - Seismic Retrofit Project No. 13" plans.
2. For details not shown, see "Demolition Layout Plan No. 8" and "Interim Support - Bent 43" sheets.
3. For concrete barrier removal, see 'ROAD PLANS".
4. Dimensions shown normal to existing SFOBB line.

NOTE:
THE CONTRACTOR SHALL VERIFY ALL CONTROLLING FIELD DIMENSIONS BEFORE ORDERING OR FABRICATING ANY MATERIAL.

	BY	CHECKED
DESIGN	K. Bhala	J. Zhang
DETAILS	JK/DF/DH/DE	J. Zhang
QUANTITIES	M. Herron	K. Bhala

STATE OF CALIFORNIA DEPARTMENT OF TRANSPORTATION

DIVISION OF STRUCTURES STRUCTURE DESIGN 2

BRIDGE NO. 34-0126RL
POST MILE 5.07/5.67

SFOBB - SEISMIC RETROFIT PROJECT NO. 12

SFOBB - SAN FRANCISCO APPROACH (REPLACE

MAINLINE

DEMOLITION DETAILS BENT NO. 43

STRUCTURES DESIGN DETAIL SHEET (ENGLISH) (REV. 1/1/99)

ORIGINAL SCALE IN INCHES FOR REDUCED PLANS 0 1 2 3

CU 04
EA 0435V1

FILE => qmudd43.dgn

DISREGARD PRINTS BEARING EARLIER REVISION DATES

REVISION DATES (PRELIMINARY STAGE ONLY) 10-24-00 10-26-00 10-30-00 11-15-00 12-14-00 5-23-01 7-22-01

SHEET 308 OF 419

USERNAME => TIME PLOTTED => 12:15 DATE PLOTTED => 22-JUN-2002

DIST	COUNTY	ROUTE	POST MILES TOTAL PROJECT	SHEET No	TOTAL SHEETS
04	SF	80	4.9/5.9	1190	1511

G. Setberg
REGISTERED CIVIL ENGINEER
12-03-01

6-17-02
PLANS APPROVAL DATE

REGISTERED PROFESSIONAL ENGINEER
G. Setberg
No. 47829
Exp. 12-31-03
CIVIL
STATE OF CALIFORNIA

The State of California or its officers or agents shall not be responsible for the accuracy or completeness of electronic copies of this plan sheet.

Caltrans now has a web site! To get to the web site, go to: http://www.dot.ca.gov

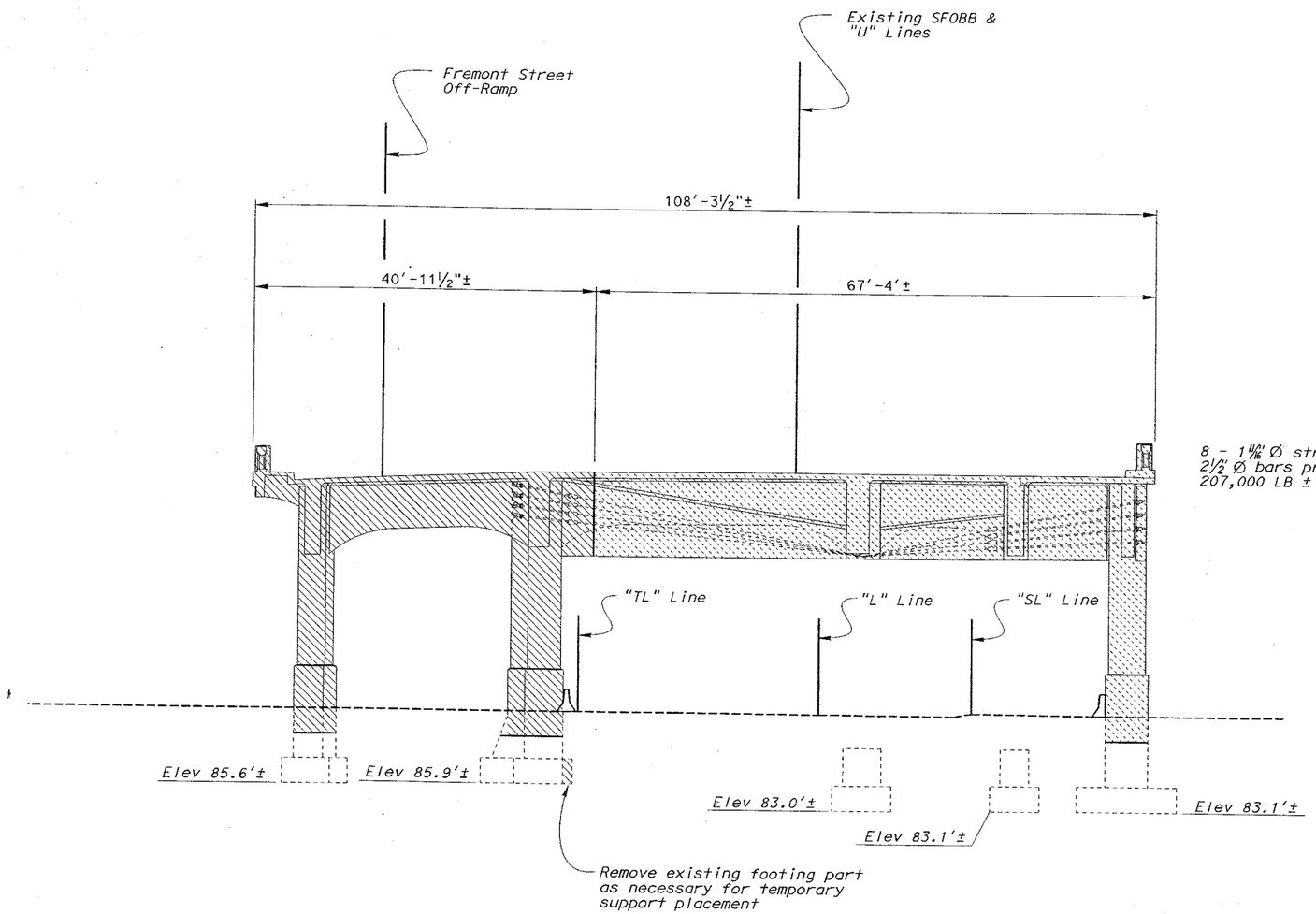

ELEVATION - BENT 44

Scale: 1/8"=1'-0"

LEGEND

Limits of Stage 2 Bridge Removal

Limits of Stage 5 Bridge Removal

Notes:

1. For bent locations and details not shown, see "Demolition Layout Plan No. 8" and "Interim Support - Bent 44" sheets.
2. For concrete barrier removal, see "ROAD PLANS".
3. Dimensions shown normal to existing SFOBB Line.

NOTE:
THE CONTRACTOR SHALL VERIFY ALL CONTROLLING FIELD DIMENSIONS BEFORE ORDERING OR FABRICATING ANY MATERIAL.

	BY	CHECKED
DESIGN	K. Bhala	J. Zhang
DETAILS	JK/FD/MH/DE	J. Zhang
QUANTITIES	M. Herron	K. Bhala

STRUCTURES DESIGN DETAIL SHEET (ENGLISH) (REV. 1/1/99)

ORIGINAL SCALE IN INCHES FOR REDUCED PLANS 0 1 2 3

SFOBB - SEISMIC RETROFIT PROJECT NO. 12

STATE OF CALIFORNIA
DEPARTMENT OF TRANSPORTATION

DIVISION OF STRUCTURES
STRUCTURE DESIGN 2

CU 04
EA 0435V1

FILE => amudd44.dgn

BRIDGE NO. 34-0126RL
POST MILE 5.07/5.67

SFOBB - SAN FRANCISCO APPROACH (REPLACE)

MAINLINE

DEMOLITION DETAILS BENT NO.44

DISREGARD PRINTS BEARING EARLIER REVISION DATES

REVISION DATES (PRELIMINARY STAGE ONLY) 10-26-00 10-27-00 10-30-00 11-15-00 12-11-00 5-23-01 7-22-01

SHEET 309 OF 419

USERNAME => trpierce DATE PLOTTED => 22-JUN-2002 TIME PLOTTED => 12:16

DIST	COUNTY	ROUTE	POST MILES TOTAL PROJECT	SHEET No	TOTAL SHEETS
04	SF	80	4.9/5.9	1191	1511

REGISTERED CIVIL ENGINEER 12-03-01

6-17-02
PLANS APPROVAL DATE

REGISTERED PROFESSIONAL ENGINEER G. Setberg No. 47829 Exp. 12-31-03 CIVIL STATE OF CALIFORNIA

The State of California or its officers or agents shall not be responsible for the accuracy or completeness of electronic copies of this plan sheet.

Caltrans now has a web site! To get to the web site, go to: http://www.dot.ca.gov

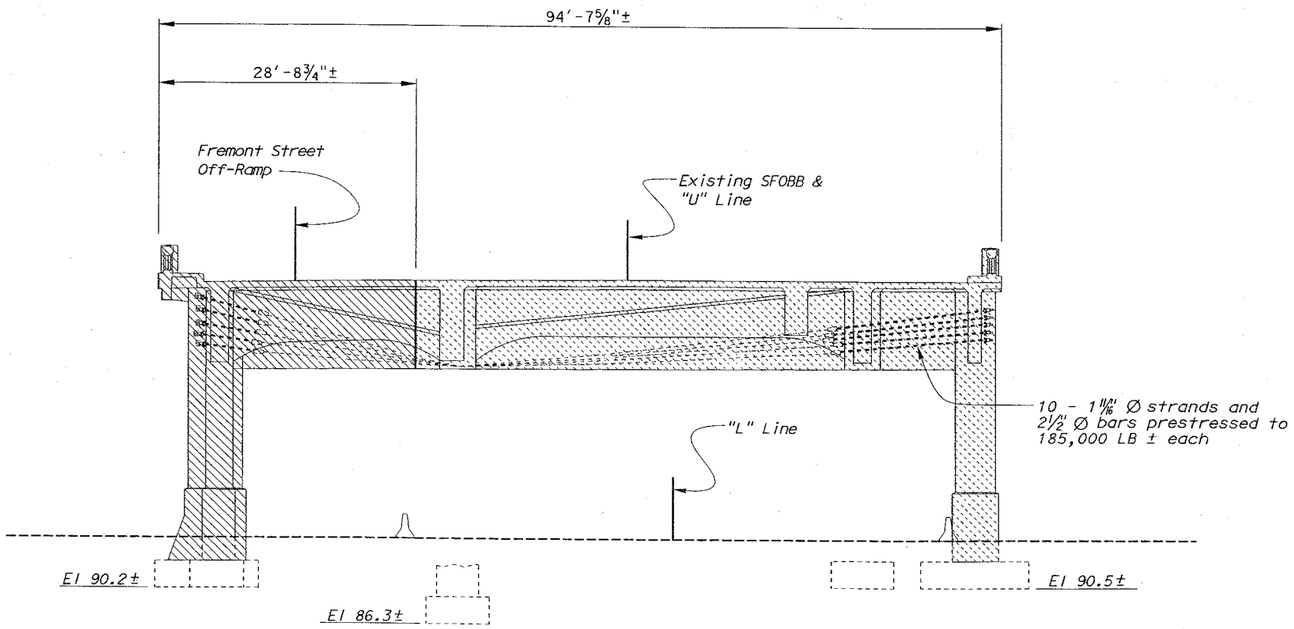

ELEVATION

Scale 1/8" = 1'-0"

LEGEND

- Indicates Demolation Limits
- Indicates Limits of Stage 2 Bridge Removal
- Indicates Limits of Stage 5 Bridge Removal

Notes:

1. For bent locations and details not shown, see "Demolition Layout Plan No. 8" and "Interim Support- Bent 45" sheets.
2. For concrete barrier removal see, "ROAD PLANS".
3. Dimensions shown normal to existing SFOBB line.

NOTE;
THE CONTRACTOR SHALL VERIFY ALL CONTROLLING FIELD DIMENSIONS BEFORE ORDERING OR FABRICATING ANY MATERIAL.

	BY	CHECKED
DESIGN	K. Bhala	J. Zhang
DETAILS	D. Elliott	J. Zhang
QUANTITIES	M. Herron	K. Bhala

STATE OF CALIFORNIA DEPARTMENT OF TRANSPORTATION

DIVISION OF STRUCTURES STRUCTURE DESIGN 2

SFOBB - SEISMIC RETROFIT PROJECT NO. 12

SFOBB - SAN FRANCISCO APPROACH (REPLACE)

MAINLINE

DEMOLITION DETAILS BENT NO.45

BRIDGE NO. 34-0126RL
POST MILE 5.07/5.67

CU 04
EA 0435V1

DISREGARD PRINTS BEARING EARLIER REVISION DATES

REVISION DATES (PRELIMINARY STAGE ONLY) 11-27-00 5-22-01 7-30-01 9-19-01

SHEET 310 OF 419

STRUCTURES DESIGN DETAIL SHEET (ENGLISH) (REV. 1/1/99)

ORIGINAL SCALE IN INCHES FOR REDUCED PLANS 0 1 2 3

FILE => amudd45.dgn

USERNAME => TFL DATE PLOTTED => 22-JUN-2002 TIME PLOTTED => 12:16

DIST	COUNTY	ROUTE	POST MILES TOTAL PROJECT	SHEET No	TOTAL SHEETS
04	SF	80	4.9/5.9	1192	1511

G. Setberg
REGISTERED CIVIL ENGINEER
12-03-01

6-17-02
PLANS APPROVAL DATE

REGISTERED PROFESSIONAL ENGINEER
G. Setberg
No. 47829
Exp. 12-31-03
CIVIL
STATE OF CALIFORNIA

The State of California or its officers or agents shall not be responsible for the accuracy or completeness of electronic copies of this plan sheet.

Caltrans now has a web site! To get to the web site, go to: http://www.dot.ca.gov

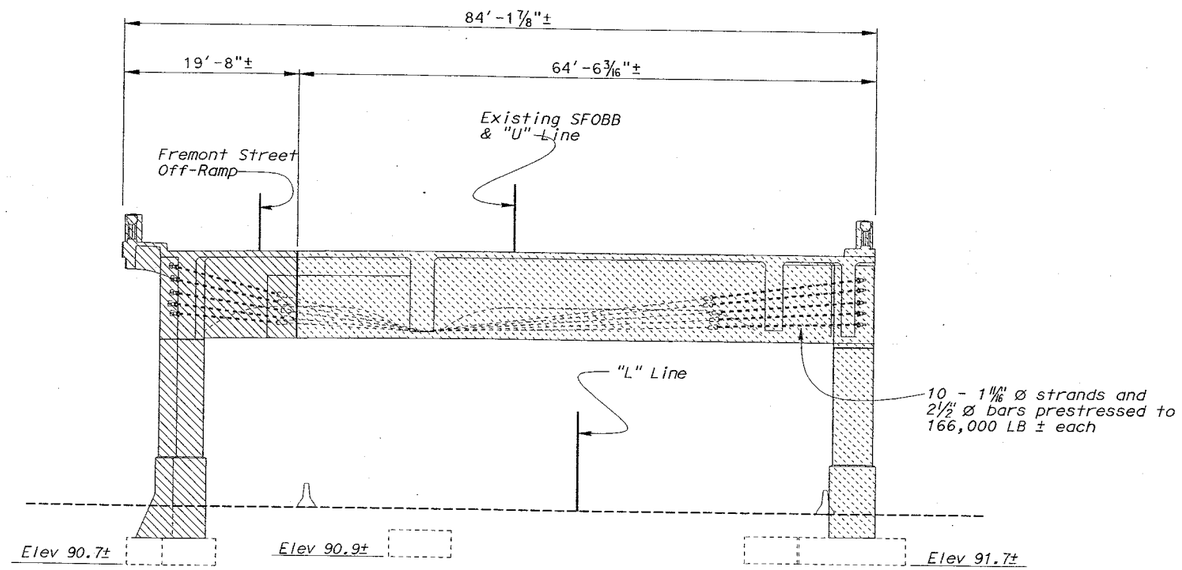

ELEVATION

Scale 1/8"= 1'-0"

LEGEND

- Indicates Demolation Limits
- Indicates Limits of Stage 2 Bridge Removal
- Indicates Limits of Stage 5 Bridge Removal

Notes:

1. For bent locations and details not shown, see "Demolition Layout Plan No. 8" and "Interim Support - Bent 46" sheets.
2. For concrete barrier removal see, "ROAD PLANS".
3. Dimensions shown normal to existing SFOBB line.

NOTE;
THE CONTRACTOR SHALL VERIFY ALL CONTROLLING FIELD DIMENSIONS BEFORE ORDERING OR FABRICATING ANY MATERIAL.

	BY	CHECKED
DESIGN	K. Bhala	J. Zhang
DETAILS	D. Elliott	J. Zhang
QUANTITIES	M. Herron	K. Bhala

STRUCTURES DESIGN DETAIL SHEET (ENGLISH) (REV. 1/1/99)

ORIGINAL SCALE IN INCHES FOR REDUCED PLANS 0 1 2 3

SFOBB - SEISMIC RETROFIT PROJECT NO. 12

STATE OF CALIFORNIA DEPARTMENT OF TRANSPORTATION

DIVISION OF STRUCTURES STRUCTURE DESIGN 2

BRIDGE NO. 34-0126RL
POST MILE 5.07/5.67

CU 04
EA 0435V1

FILE => omudd46.dgn

SFOBB - SAN FRANCISCO APPROACH (REPLACE)

MAINLINE

DEMOLITION DETAILS BENT NO.46

DISREGARD PRINTS BEARING EARLIER REVISION DATES

REVISION DATES (PRELIMINARY STAGE ONLY) 11-21-00 11-21-00

SHEET 311 OF 419

USERNAME => trpierce DATE PLOTTED => 22-JUN-2002 TIME PLOTTED => 12:16

DIST	COUNTY	ROUTE	POST MILES TOTAL PROJECT	SHEET No	TOTAL SHEETS
04	SF	80	4.9/5.9	1193	1511

REGISTERED CIVIL ENGINEER 12-03-01

6-17-02
PLANS APPROVAL DATE

REGISTERED PROFESSIONAL ENGINEER G. Setberg No. 47829 Exp. 12-31-03 CIVIL STATE OF CALIFORNIA

The State of California or its officers or agents shall not be responsible for the accuracy or completeness of electronic copies of this plan sheet.

Caltrans now has a web site! To get to the web site, go to: http://www.dot.ca.gov

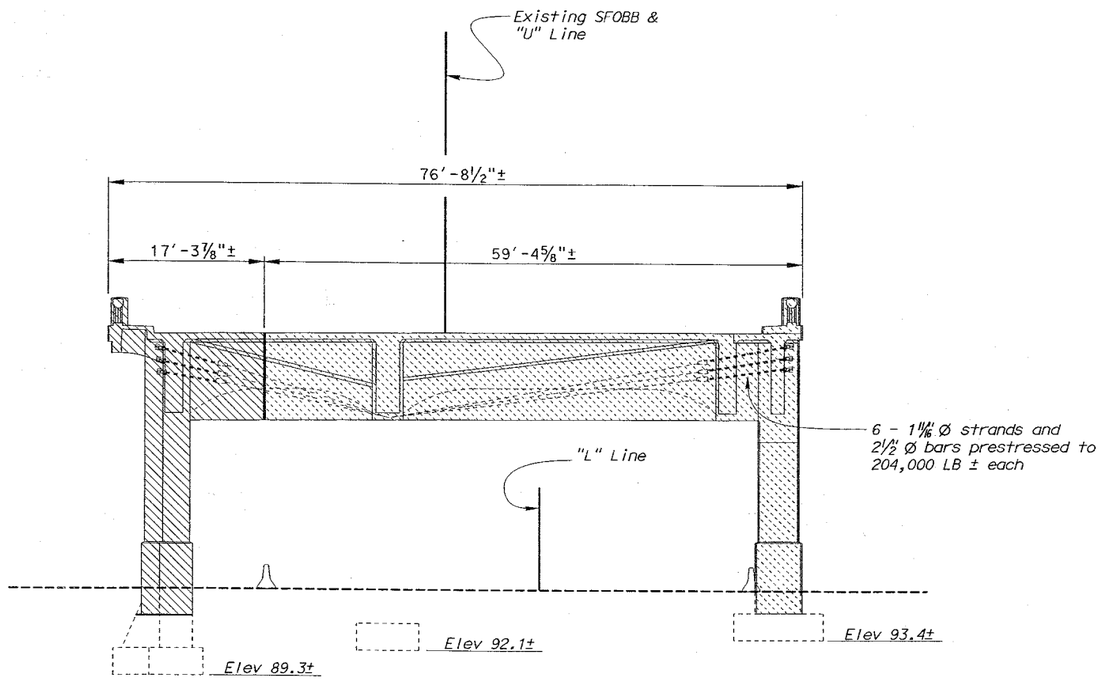

ELEVATION

Scale 1/8" = 1'-0"

LEGEND

- Indicates Demolation Limits
- Indicates Limits of Stage 2 Bridge Removal
- Indicates Limits of Stage 5 Bridge Removal

Notes:

1. For bent locations and details not shown, see "Demolition Layout Plan No. 8", "Interim Support - Bent 48" and "Interim Support - Bent 49" sheets.
2. For concrete barrier removal see, "ROAD PLANS".
3. Dimensions shown normal to existing SFOBB line.

NOTE;
THE CONTRACTOR SHALL VERIFY ALL CONTROLLING FIELD DIMENSIONS BEFORE ORDERING OR FABRICATING ANY MATERIAL.

	BY	CHECKED
DESIGN	K. Bhala	J. Zhang
DETAILS	D. Elliott	J. Zhang
QUANTITIES	M. Herron	K. Bhala

STATE OF CALIFORNIA DEPARTMENT OF TRANSPORTATION

DIVISION OF STRUCTURES STRUCTURE DESIGN 2

BRIDGE NO. 34-0126RL
POST MILE 5.07/5.67

SFOBB - SEISMIC RETROFIT PROJECT NO. 12

SFOBB - SAN FRANCISCO APPROACH (REPLACE)

MAINLINE

DEMOLITION DETAILS BENT NO.47

STRUCTURES DESIGN DETAIL SHEET (ENGLISH) (REV. 1/1/99)

ORIGINAL SCALE IN INCHES FOR REDUCED PLANS 0 1 2 3

CU 04
EA 0435V1

DISREGARD PRINTS BEARING EARLIER REVISION DATES → 11-27-00 5-24-01

REVISION DATES (PRELIMINARY STAGE ONLY)

SHEET 312 OF 419

FILE => amudd47.dgn

USERNAME => tt

DATE PLOTTED => 22-JUN-2002

TIME PLOTTED => 12:17

DIST	COUNTY	ROUTE	POST MILES TOTAL PROJECT	SHEET No	TOTAL SHEETS
04	SF	80	4.9/5.9	1194	1511

REGISTERED CIVIL ENGINEER 12-03-01

6-17-02
PLANS APPROVAL DATE

REGISTERED PROFESSIONAL ENGINEER G. Setberg No. 47829 Exp. 12-31-03 CIVIL STATE OF CALIFORNIA

The State of California or its officers or agents shall not be responsible for the accuracy or completeness of electronic copies of this plan sheet.

Caltrans now has a web site! To get to the web site, go to: http://www.dot.ca.gov

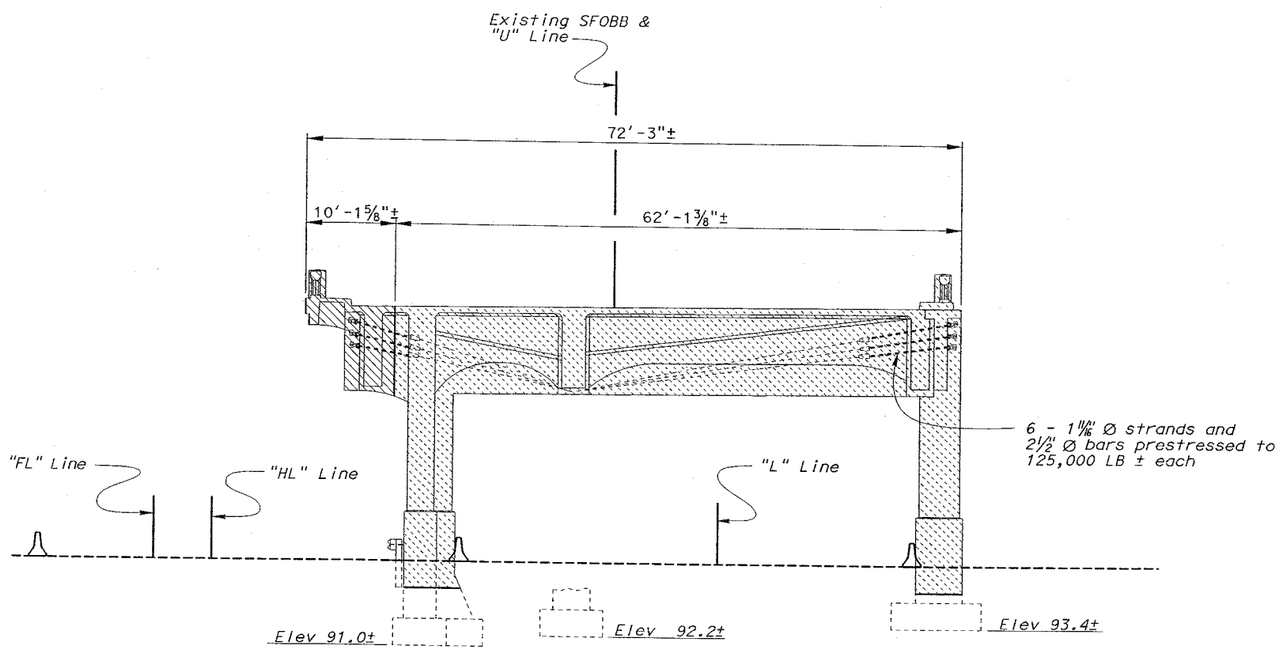

ELEVATION BENT 48

Scale 1/8" = 1'-0"

LEGEND

Indicates Demolation Limits

Indicates Limits of Stage 2 Bridge Removal

Indicates Limits of Stage 5 Bridge Removal

Notes:

1. For bent locatiosn and details not shown, see "Demolition Layout Plan No. 8" and "Interim Support - Bent 48" sheets.
2. For concrete barrier removal see, "ROAD PLANS".
3. Dimensions shown normal to existing SFOBB line.

NOTE;
THE CONTRACTOR SHALL VERIFY ALL CONTROLLING FIELD DIMENSIONS BEFORE ORDERING OR FABRICATING ANY MATERIAL.

	BY	CHECKED
DESIGN	K. Bhala	J. Zhang
DETAILS	D. Elliott	J. Zhang
QUANTITIES	M. Herron	K. Bhala

STRUCTURES DESIGN DETAIL SHEET (ENGLISH) (REV. 1/1/99)

ORIGINAL SCALE IN INCHES FOR REDUCED PLANS 0 1 2 3

SFOBB - SEISMIC RETROFIT PROJECT NO. 12

STATE OF CALIFORNIA DEPARTMENT OF TRANSPORTATION

DIVISION OF STRUCTURES STRUCTURE DESIGN 2

CU 04
EA 0435V1

FILE => pmudd48.dgn

BRIDGE NO. 34-0126RL
POST MILE 5.07/5.67

SFOBB - SAN FRANCISCO APPROACH (REPLACE)

MAINLINE

DEMOLITION DETAILS BENT NO.48

DISREGARD PRINTS BEARING EARLIER REVISION DATES

REVISION DATES (PRELIMINARY STAGE ONLY) 11-18-00 5-24-01

SHEET 313 OF 419

USERNAME => trpierce DATE PLOTTED => 22-JUN-2002 TIME PLOTTED => 12:17

DIST	COUNTY	ROUTE	POST MILES TOTAL PROJECT	SHEET No	TOTAL SHEETS
04	SF	80	4.9/5.9	1195	1511

REGISTERED CIVIL ENGINEER 12-03-01

6-17-02
PLANS APPROVAL DATE

REGISTERED PROFESSIONAL ENGINEER G. Setberg No. 47829 Exp. 12-31-03 CIVIL STATE OF CALIFORNIA

The State of California or its officers or agents shall not be responsible for the accuracy or completeness of electronic copies of this plan sheet.

Caltrans now has a web site! To get to the web site, go to: http://www.dot.ca.gov

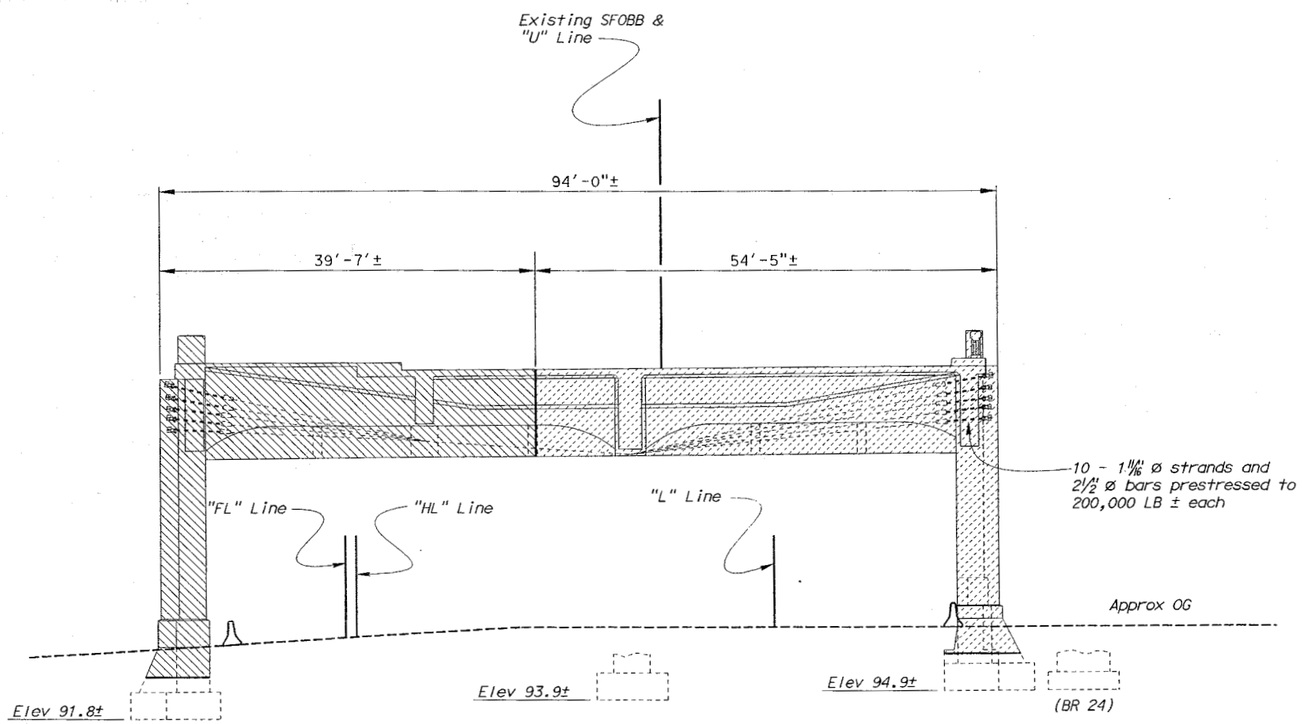

ELEVATION BENT 49

Scale 1/8" = 1'-0"

LEGEND

- Indicates Demolation Limits
- Indicates Limits of Stage 2 Bridge Removal
- Indicates Limits of Stage 4 Bridge Removal

Notes:

1. For bent locations and details not shown, see "Demolition Layout Plan No. 8" and "Interim Support - Bent 49" sheets.
2. For concrete barrier removal see, "ROAD PLANS".

NOTE;
THE CONTRACTOR SHALL VERIFY ALL CONTROLLING FIELD DIMENSIONS BEFORE ORDERING OR FABRICATING ANY MATERIAL.

SFOBB - SEISMIC RETROFIT PROJECT NO. 12

SFOBB - SAN FRANCISCO APPROACH (REPLACE)

	BY	CHECKED
DESIGN	K. Bhala	J. Zhang
DETAILS	D. Elliott	J. Zhang
QUANTITIES	M. Herron	K. Bhala

STATE OF CALIFORNIA DEPARTMENT OF TRANSPORTATION

DIVISION OF STRUCTURES STRUCTURE DESIGN 2

BRIDGE NO. 34-0126RL
POST MILE 5.07/5.67

MAINLINE
DEMOLITION DETAILS BENT NO.49

STRUCTURES DESIGN DETAIL SHEET (ENGLISH) (REV. 1/1/99)

ORIGINAL SCALE IN INCHES FOR REDUCED PLANS 0 1 2 3

CU 04
EA 0435V1

DISREGARD PRINTS BEARING EARLIER REVISION DATES

REVISION DATES (PRELIMINARY STAGE ONLY) 11-22-00 5-24-01

SHEET 314 OF 419

FILE => amudd49.dgn

USERNAME => TIME PLOTTED => 12:18 DATE PLOTTED => 22-

BUS STORAGE FACILITY (Contract 17-05-BSF-000)

Questions are numbered in the order received. Questions 1–20 are included in a previously issued response set, which was posted to the TJPA's website at http://transbaycenter.org/rfp/bus-storage-facility on February 7, 2017.

Question No.	Submission Date	Drawing No.	Document/ Spec. No.	Question	Response
21	2.7.17	---	13 34 19	The bid spec calls for CBC 2013; that code is no longer valid. The code is CBC 2016. Modular builders will not build to the City and County of San Francisco Code. California has a state program under the Department of Housing and Community Dev. Even if a modular manufacture was willing to build to a City code there would be no inspection process to validate it; the state won't inspect to the city's code and the city won't inspect at a factory outside of their jurisdiction. Can you look into their concerns and revise the specifications if required?	The manufacturing of the proposed Modular Units will be regulated and governed by the California Department of Housing and Community Development (HCD). The references to 2013 CBC and its associated standards remain where applicable.
22	2.7.17	A-3001, A-3004, A-3010	13 34 19	The spec provided in the bid docs (Section 13 34 19 – Commercial Modular Building Systems) is NOT applicable to the project based on what is shown on the drawings (sheet A-3001, 3004, 3010). The specs conflict with the drawings and list three manufacturers that are NOT applicable to what is depicted in the drawings. The manufacturers listed are clean room, and smaller modular office/building suppliers primarily applicable to interior warehouse type installations. One of the manufacturers only supplies fabric wall structures! The plans call for modular section more typical of a GE modular or William Scotsman type structure, but with metal siding and roofing (3 units on axles each at 12' wide X 40' long joined together for a final 36' x 40' building). My suppliers are reluctant to price with the conflicting specs. They do not want to assume. Can you look into his concerns and revise the specifications, if necessary.	Specification Section 13 34 19, Commercial Modular Building Systems, will be revised to delete incorrect manufacturer references and issued with a future addendum. Acceptable manufacturers will include Williams Scotsman, Mobile Modular, ModSpace (formerly GE Capital) or equally qualified vendors.
23	2.7.17	C-1001, C-1002		On plan Sheets C-1001 and C-1002, it says to remove existing buried foundations as needed. Is it safe to assume that the foundations have been removed to at least 3' below existing grade, as is Caltrans' current standard procedure? If not, can you reference which plan sheets, either from the bid set or the one or more appended Caltrans construction drawings that show the as-built elevations to which the piers were removed?	See the response to question #15 in the previously issued response set.

Question No.	Submission Date	Drawing No.	Document/ Spec. No.	Question	Response
24	2.8.17	C-1001, C-1002		Please see attached bid drawings C-1001 and C-1002. Please confirm should the highlighted existing foundations require demolition, the existing foundations must be demolished 3' below new final grade.	The existing foundations have been demolished 3' below the existing grade. They will need to be further demolished/ removed if the finished grade will be below the elevation to which the foundations were previously demolished. See also the response to question #15 in the previously issued response set.
25	2.8.17	C-2001, C-2002		Please see attached bid drawings Sheet C-2001 and C-2002, highlighted note states "2" AC overlay (E) soil to remain". During Demo and excavation for flat work, is it acceptable to excavate around columns and round casings, install the retaining and stacked blocked walls, then backfill soil after completion of the referenced walls. Should the soil need to remain against the casings and columns, temp shoring would be required.	Existing soil is to remain in place around existing column casings as per the plans.

BUS STORAGE FACILITY (Contract 17-05-BSF-000)

Questions are numbered in the order received. Questions 1–25 are included in previously issued response sets, which were posted to the TJPA's website at http://transbaycenter.org/rfp/bus-storage-facility. Numbers missing in the sequence will be included in a future answer set.

Question No.	Submission Date	Drawing No.	Document/ Spec. No.	Question	Response
26	2.9.17	---	28 31 11, Paragraph 2.1.A	Fire alarm system description shows components need to be compatible to operate as an extension of the EST system. EST is a manufacturer of the fire alarm components, but has several models to choose from. Which system will be the main control system of these additional components?	The main control system in the Transbay Transit Center will be an EST3 model.
27	2.10.17	---	00 08 13/APA -22, Paragraph 6a	The warranty period for workmanship/defects, etc. appears to be limited to 1 year after completion. However, there is a 1 year warranty for non-conforming work related to surface improvements (pavement, curbs, sidewalks, etc.) and a 2 year warranty for non-conforming Subsurface work (foundations, sewers, side sewers, etc.). Please confirm that this is an accurate requirement of the contract as additional charges will apply if certain portions of the work are covered by 2 year warranties.	Confirmed. Please refer to individual specification sections for supplemental warranty requirements.
29	2.14.17	---	---	Since there are apparently two Addendum 1's for this project, should we refer to the addenda as Addendum 1A and 1B	There has been only one Addendum No.1 issued during the Invitation for Bid (IFB) phase; the other Addendum No. 1 referred to was issued during the Request for Qualifications (RFQ) phase of the procurement. Therefore, for bidding this project, Addendum No. 1 to Bidding Documents, dated February 10, 2017, forms a part of the Contract Documents and modifies the original Bidding Documents dated October 31, 2016. An acknowledgment of receipt of Addendum No. 1, and any future addenda, on the Acknowledgment of Receipt of Addenda form (Section 00 04 32) is required.
30	2.14.17	---	13 34 19, 2.12.A.4	Please provide part numbers for all door hardware, including all electrified components.	See Door Schedule on Sheet A-9010, Note #3. Refer to Hardware Set Grouping located on Sheet A-9011. Door Number locations can be found on Sheets A-3001, A-3002, and A-1032, Note 25.
31	2.16.17	A-8009, Details 6, 4 & 2	13 34 19	On sheet A-8009, section detail 6, 4 & 2 ask for 5/8" RIP x GWB. What does RIP stand for?	The RIP designation is incorrect. Use Type X GWB in lieu of RIP GWB.

Question No.	Submission Date	Drawing No.	Document / Spec. No.	Question	Response
32	2.17.17	S-1003	---	Note 5 on Sheet S-1003 references a settlement period for retaining walls. Does this apply to Abut 1 and 6 as well?	Confirmed. Please refer to Specification Section 31 00 06 paragraph 3.14 for required settlement periods for retaining walls, Abutment 1 and Abutment 6.
33	2.17.17	S-1065	13 48 43	Would it be possible to offer friction pendulum bearings with comparable performance to the specified lead-rubber bearings?	Any proposed revisions to the specified bearings would need to meet or exceed the performance of the specified bearings and would require approval from Caltrans. Please refer to Specification Section 00 04 20 for procedures for post-contract-award value engineering proposals.
34	2.17.17	---	---	We are a second tier contractor looking to bid on the security systems, have prepared the requisite signed NDA forms and list, but CANNOT find an Upload button on the website. We need to get access to these security protected documents and we are losing valuable time trying to get these to you. Can you please advise where to send these NDAs so we can get the documents?	The website upload button for NDA forms was temporarily disabled and is now back in place.
35	2.17.17	---	00 04 10	Please provide details for the OCS components to be temporarily removed and re-installed. Is storage provided by the owner or MUNI?	The OCS components consist of two OCS conductor cables currently attached to the underside of the eastbound Bay Bridge approach. These will need to be temporarily removed and stored by the Contractor to enable installation of temporary falsework for the bus link ramp. The Contractor will need to re-install the OCS wires upon removal of falsework.
36	2.17.17	---	---	Will this project be subject to Caltrans oversight?	Yes, Caltrans will have an oversight role because the project is located within the State Right of Way. Resident Engineer services will be provided by a TJPA representative.

BUS STORAGE FACILITY (Contract 17-05-BSF-000)

Questions are numbered in the order received. Questions 1–27 and 29–36 are included in previously issued response sets, which were posted to the TJPA's website at http://transbaycenter.org/rfp/bus-storage-facility.

Question No.	Submission Date	Drawing No.	Document/ Spec. No.	Question	Response
28	2.14.17	---	00 07 00, 6.06.C	This section refers to mark-up for overhead and profit for "subcontractors, lower tier subcontractors or supplier." It does not specify mark-up for "contractor"?	Paragraph 6.06.C will be revised as follows: 1. For Work performed by Contractor, the markup shall equal a maximum of 15 percent of its direct costs, as defined herein. 2. For Work performed by a Subcontractor, the markup shall equal a maximum of 15 percent of its direct costs, as defined herein. Contractor shall receive a maximum 5 percent markup on the Subcontractor's total cost. 3. For Work performed by a Lower-Tier Subcontractor or Supplier, the markup shall equal a maximum of 15 percent of its direct costs, as defined herein. Contractor and Subcontractor shall each receive a 5 percent markup on the total cost of their respective Lower-Tier Subcontractors. 4. In no case shall the sum of the individual markups applied to a Change Order exceed 25 percent, regardless of the number of Subcontractor tiers involved in performing the Work.
37	2.17.17	A-8010, Detail 3	---	1) There is no specification for the precast concrete shown on 3/A-8010. Please provide. 2) Sheet S-2025 shows a Stage 1 and Stage 2 work. What does "Install temporary sound wall mean?" I cannot find anything in the construction documents that addresses this.	1) Precast Concrete Sill – MODCON (or equal) manufactures a variety of sill profiles including the sill profile shown in detail 3/ detail 3/A-8010. 2) Chapter 5 of the Transbay Terminal Final Environmental Impact Statement/ Environmental Impact Report (FEIS/EIR) includes mitigation requirements including noise mitigation item NoiO3 for noise walls prior to the start of construction. Plan sheet S-2025 shows a temporary sound wall in order to comply with this requirement. The FEIS/EIR can be downloaded from the TJPA site at http://transbaycenter.org/documents/final-eiseir

Question No.	Submission Date	Drawing No.	Document/ Spec. No.	Question	Response
				3) Addenda 1 changes to specification 04 22 00 have the CMU as being split faced and provides the field and accent colors. Will sheet A-6011 be revised to reflect this and will split faced units also be required on the interior walls? 4) Details 6 and 8 on A-9013 show chamfered corners on the masonry. Is that the intent?	3) Addendum 1 addresses the CMU used on the perimeter wall. Sheet A-5002 and Detail A-6011 refer to a fluted block and ground face block. The fluted block will be oriented to the sides of the building in the public view and of the same block color as the ground face block. No revisions to the Storage Building elevations and wall sections are required. Interior CMU walls orientated to the inside of the building will be ground face block surfaces. 4) Chamfered block is not required.